22x34 SHEET
1: 31.073

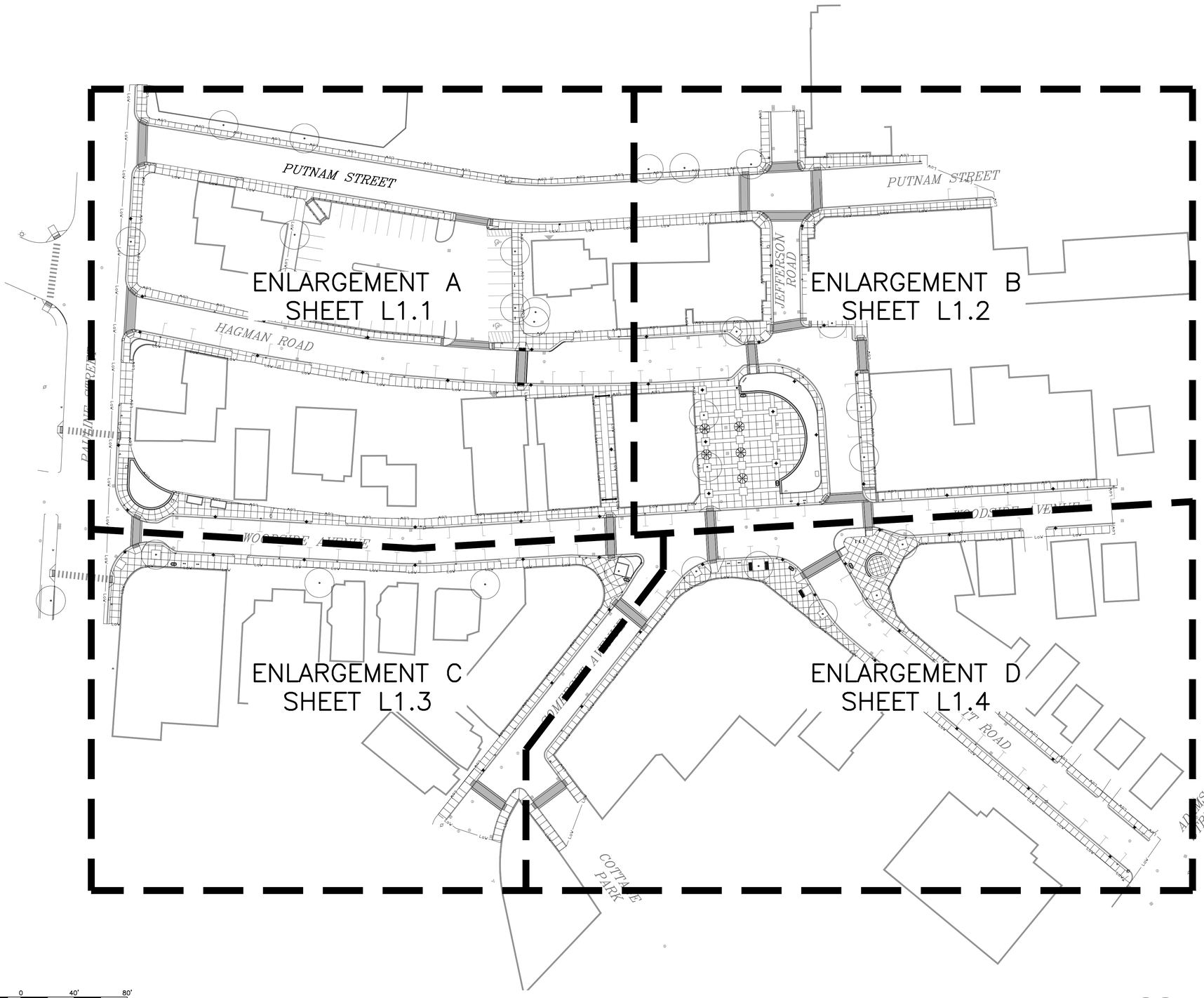

40' 0 40' 80'
BAR SCALE
1" = 40'-0"
CHECK GRAPHIC SCALE BEFORE USING

MATERIAL NOTES

1. The Contractor shall verify locations of and protect all utilities, drainage, and sub-drainage structures prior to commencing work. The Contractor will take sole responsibility for the cost incurred due to damage and replacement of all utilities damaged on the site.
2. Contractor shall verify all dimensions and elevations on the ground and report any discrepancies to the Landscape Architect prior to commencing construction.
3. All utility & drain lines to be coordinated with footings for site features. See Civil Plans for existing and proposed utility information.
4. Repair any damage to existing site features to remain and to any disruption beyond the limit of work at no expense to owner.

All control joints spaced every 5'± (6' maximum), expansion joints every 30' (maximum), unless shown otherwise on plans. Locate expansion joints where paving abuts structures, curbs, walls, or colored concrete. See Sheet C-606 for expansion joint and score joint details.

LEGEND

- Limit of Work
- Edge of Structural Soil
- Typ. — Typical
- Vehicular Curb See Sheet C-300
- Landscape Curb
- Stamped Concrete Band
- Concrete Walk With Control/Exp. Joints
- Tactile Warning Strip, See Sheet C-606
- Existing Utility Pole
- Post Light
- Parking Lot Light
- 6' Bench
- Dual Trash & Recycle Receptacle
- Bike Rack
- Table With Metal Umbrella
- Drainage Structures, See 200 Series Plans
- Sewer Structure, See 200 Series Plans
- Fire Hydrant, See 200 Series Plans
- Street Sign, See Civil Sheet C-301
- Proposed Tree and Shrub
- Existing Tree to Remain

ISSUE FOR CONSTRUCTION

CBA | Landscape Architects LLC
24 THORNDIKE ST | CAMBRIDGE, MA 02141
phone 617.443.9160 | www.cbaarch.com

40 Shattuck Road, Suite 110
Andover, Massachusetts 01810
866.702.6371|www.woodardcurran.com
WOODARD & CURRAN COMMITMENT & INTEGRITY DRIVE RESULTS

THIS DOCUMENT, THE PROPERTY OF WOODARD & CURRAN INC. AND ITS CLIENT, IS INTENDED FOR THE USE OF THE CLIENT AND WOODARD & CURRAN INC. PROPRIETARY

MASSACHUSETTS CHRISTOPHER J. CHADBOURNE REGISTERED LANDSCAPE ARCHITECT NO. 1512

REV	DESCRIPTION	DATE
0	CONFORMED SET	12/13/2019

DESIGNED BY: CCB/PAH
DRAWN BY: PAH
CHECKED BY: CCB
1723_L1_MA.DWG

LANDSCAPE OVERALL MATERIALS KEY PLAN

TOWN OF WINTHROP
1 METCALF SQUARE
WINTHROP, MASSACHUSETTS

CENTRE BUSINESS DISTRICT INFRASTRUCTURE IMPROVEMENTS

JOB NO.:230079
DATE: DECEMBER 2019
SCALE: 1" = 40'-0"
SHEET: 32 OF 59

L1.0

M:\0-CBA-Cad\Parks\Winthrop Center Business District\CD\1723_L1_MA.dwg, Jul 31, 2019 - 2:35pm

22x34 SHEET
1:31.073

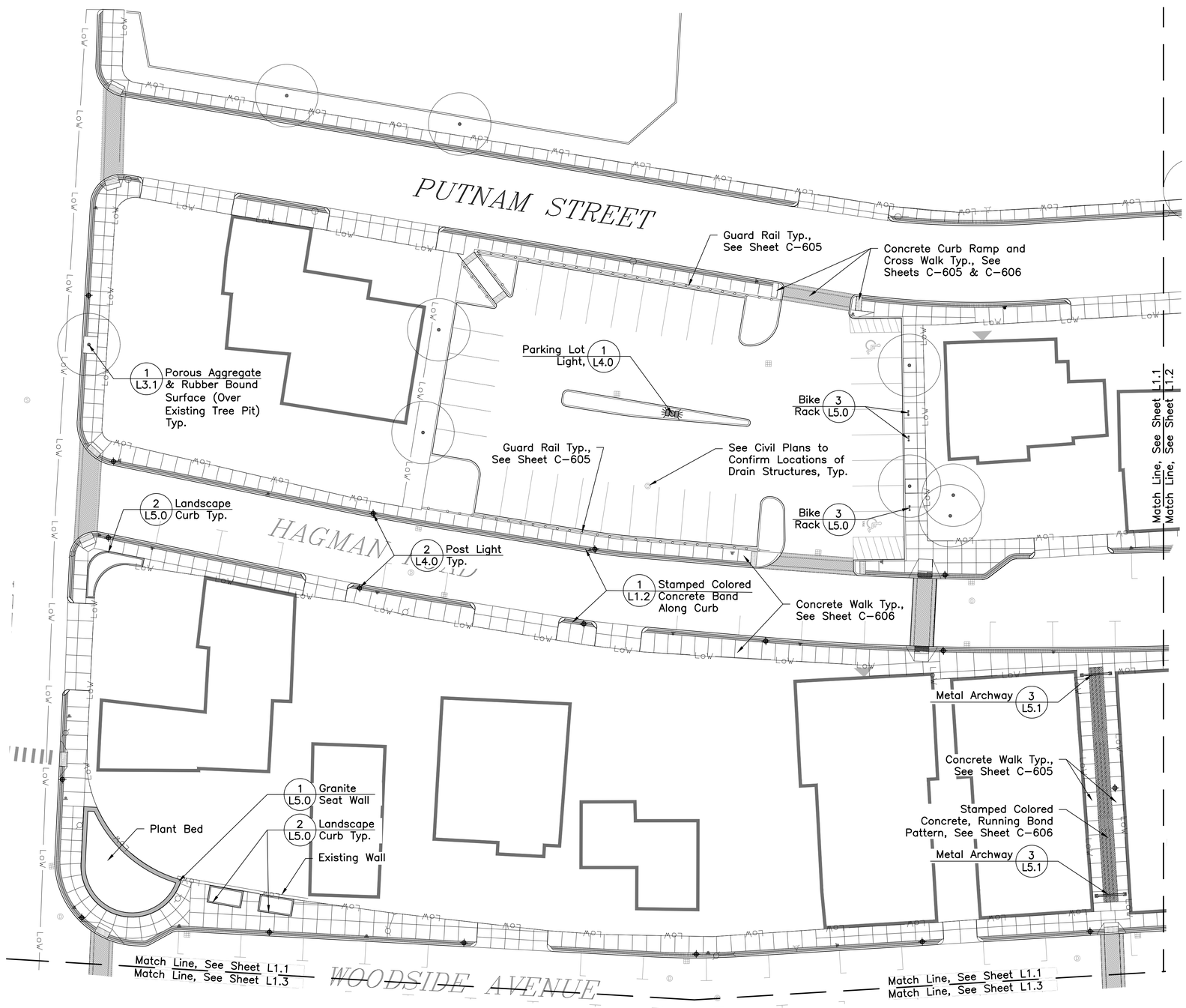

BAR SCALE
1" = 20'–0"
CHECK GRAPHIC SCALE BEFORE USING

See Sheet L1.0 For Notes

All control joints spaced every 5'± (6' maximum), expansion joints every 30' (maximum), unless shown otherwise on plans. Locate expansion joints where paving abuts structures, curbs, walls, or colored concrete. See Sheet C–606 for expansion joint and control joint details.

LEGEND

- Limit of Work
- Edge of Structural Soil
- Typ. — Typical
- Vehicular Curb See Sheet C–300
- Landscape Curb
- Stamped Concrete Band
- Concrete Walk With Control/Exp. Joints
- Tactile Warning Strip, See Sheet C–606
- Existing Utility Pole
- Post Light
- Parking Lot Light
- 6' Bench
- Dual Trash & Recycle Receptacle
- Bike Rack
- Table With Metal Umbrella
- Drainage Structures, See 200 Series Plans
- Sewer Structure, See 200 Series Plans
- Fire Hydrant, See 200 Series Plans
- Street Sign, See Civil Sheet C–301
- Proposed Tree and Shrub
- Existing Tree to Remain

ISSUE FOR CONSTRUCTION

CBA | Landscape Architects LLC
24 THORNDIKE ST | CAMBRIDGE, MA 02141
phone 617.443.9160 | www.cbaarch.com

40 Shattuck Road, Suite 110
Andover, Massachusetts 01810
866.702.6371|www.woodardcurran.com
WOODARD & CURRAN COMMITMENT & INTEGRITY DRIVE RESULTS

THIS DOCUMENT OR THE PROPERTY OF WOODARD & CURRAN INC. AND ITS CLIENT. THIS DOCUMENT OR THE INFORMATION CONTAINED HEREIN MAY NOT BE REPRODUCED OR DISTRIBUTED WITHOUT WRITTEN CONSENT OF W&C.

MASSACHUSETTS DENIS J. CROWLEY NO. 1512 REGISTERED LANDSCAPE ARCHITECT

REV	DESCRIPTION	DATE
0	CONFORMED SET	12/13/2019

DESIGNED BY: CCB/PAH
DRAWN BY: PAH
CHECKED BY: CCB
1723_L1_MA.DWG

LANDSCAPE MATERIALS PLAN ENLARGEMENT A

TOWN OF WINTHROP
1 METCALF SQUARE
WINTHROP, MASSACHUSETTS

CENTRE BUSINESS DISTRICT INFRASTRUCTURE IMPROVEMENTS

JOB NO.:230079
DATE: DECEMBER 2019
SCALE: 1" = 20'–0"
SHEET: 33 OF 59

L1.1

M:\0-CBA-Cad\Parks\Winthrop Center Business District\CD\1723_L1_MA.dwg, Jul 31, 2019 - 2:35pm

22x34 SHEET
1:31.073

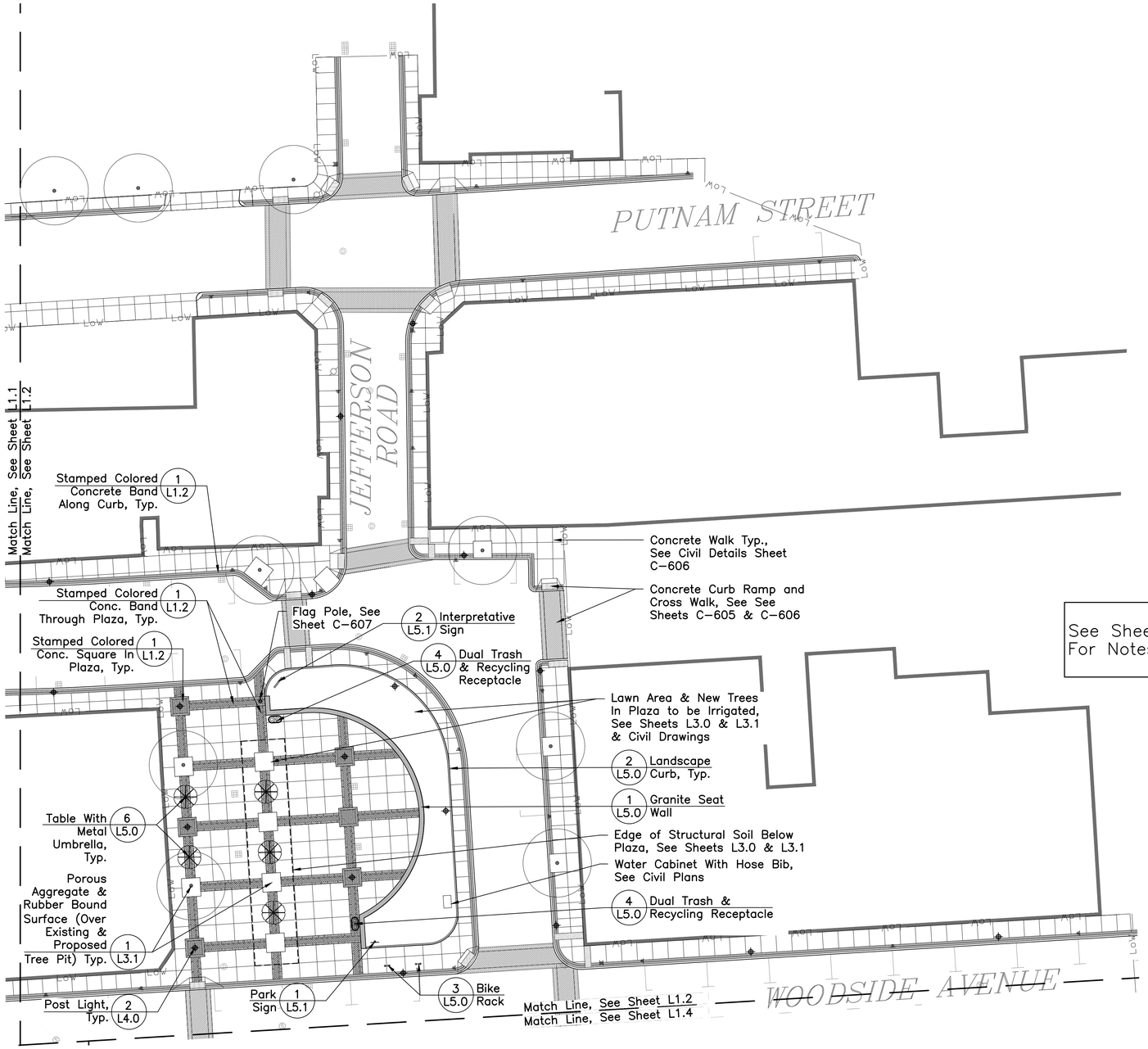

BAR SCALE
1" = 20'-0"
CHECK GRAPHIC SCALE BEFORE USING

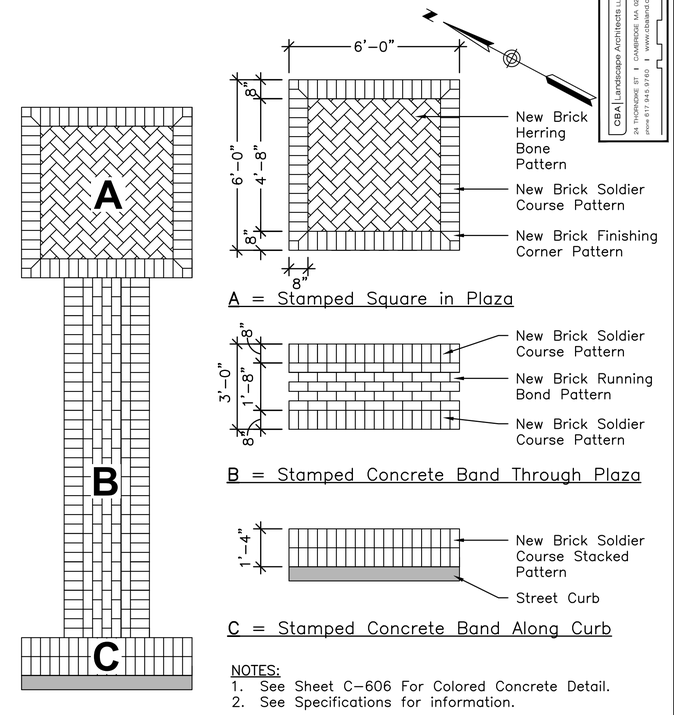

NOTES:
1. See Sheet C-606 For Colored Concrete Detail.
2. See Specifications for information.

(1) Stamped Colored Concrete Band Patterns For Central Plaza

Scale: 3/8" = 1'-0"

See Sheet L1.0 For Notes

All control joints spaced every 5'± (6' maximum), expansion joints every 30' (maximum), unless shown otherwise on plans. Locate expansion joints where paving abuts structures, curbs, walls, or colored conc. See Sheet C-606 for expansion joint & control joint details.

LEGEND

- Property Line
- Limit of Work
- Edge of Structural Soil
- Typ. — Typical
- Vehicular Curb See Sheet C-300
- Landscape Curb
- Stamped Concrete Band
- Concrete Walk With Control/Exp. Joints
- Tactile Warning Strip, See Sheet C-606
- Existing Utility Pole
- Post Light
- Parking Lot Light
- 6' Bench
- Dual Trash & Recycle Receptacle
- Bike Rack
- Table With Metal Umbrella
- Drainage Structures, See 200 Series Plans
- Sewer Structure, See 200 Series Plans
- Fire Hydrant, See 200 Series Plans
- Street Sign, See Civil Sheet C-301
- Proposed Tree and Shrub
- Existing Tree to Remain

ISSUE FOR CONSTRUCTION

CBA | Landscape Architects LLC
24 THORNDIKE ST | CAMBRIDGE, MA 02141
phone 617.443.9160 | www.cbalandscape.com

40 Shattuck Road, Suite 110
Andover, Massachusetts 01810
866.702.6371|www.woodardcurran.com
WOODARD & CURRAN COMMITMENT & INTEGRITY DRIVE RESULTS

THIS DOCUMENT, OR THE PROPERTY OF WOODARD & CURRAN INC. AND ITS CLIENT, IS THE PROPERTY OF WOODARD & CURRAN INC. AND MAY NOT BE REPRODUCED OR TRANSMITTED WITHOUT WRITTEN PERMISSION.

MASSACHUSETTS
CARLO J. CHAGNON
NO. 1512
REGISTERED LANDSCAPE ARCHITECT

REV	DESCRIPTION	DATE
0	CONFORMED SET	12/13/2019

DESIGNED BY: CCB/PAH
DRAWN BY: PAH
CHECKED BY: CCB
1723_L1_MA.DWG

LANDSCAPE MATERIALS PLAN ENLARGEMENT B

TOWN OF WINTHROP
1 METCALF SQUARE
WINTHROP, MASSACHUSETTS

CENTRE BUSINESS DISTRICT
INFRASTRUCTURE IMPROVEMENTS

JOB NO.:230079
DATE: DECEMBER 2019
SCALE: 1" = 20'-0"
SHEET: 34 OF 59

L1.2

M:\D-CBA-Cad\Parks\Winthrop Center Business District\CD\1723_L1_MA.dwg, Jul 31, 2019 - 2:35pm

22x34 SHEET
1:31.073

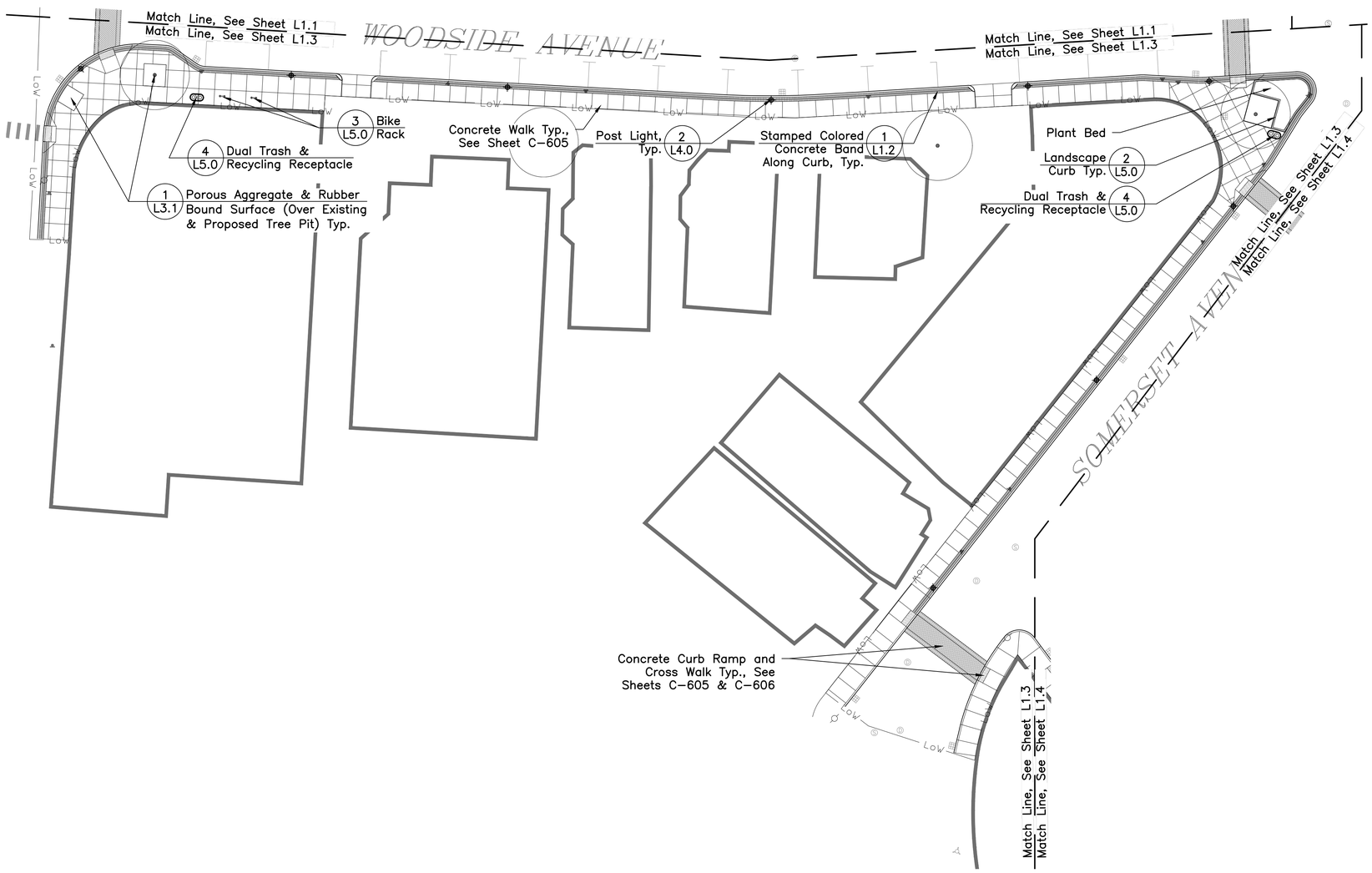

See Sheet L1.0 For Notes

All control joints spaced every 5'± (6' maximum), expansion joints every 30' (maximum), unless shown otherwise on plans. Locate expansion joints where paving abuts structures, curbs, walls, or colored concrete. See Sheet C-606 for expansion joint and control joint details.

LEGEND

- LoW — Limit of Work
- Edge of Structural Soil
- Typ. — Typical
- Vehicular Curb See Sheet C-300
- Landscape Curb
- Stamped Concrete Band
- Concrete Walk With Control/Exp. Joints
- Tactile Warning Strip, See Sheet C-606
- Existing Utility Pole
- Post Light
- Parking Lot Light
- 6' Bench
- Dual Trash & Recycle Receptacle
- Bike Rack
- Table With Metal Umbrella
- Drainage Structures, See 200 Series Plans
- Sewer Structure, See 200 Series Plans
- Fire Hydrant, See 200 Series Plans
- Street Sign, See Civil Sheet C-301
- Proposed Tree and Shrub
- Existing Tree to Remain

BAR SCALE
1" = 20'-0"
CHECK GRAPHIC SCALE BEFORE USING

ISSUE FOR CONSTRUCTION

CBA | Landscape Architects LLC
24 THORNDIKE ST | CAMBRIDGE, MA 02141
phone 617.443.9160 | www.cbalandscapes.com

40 Shattuck Road, Suite 110
Andover, Massachusetts 01810
866.702.6371|www.woodardcurran.com
COMMITMENT & INTEGRITY DRIVE RESULTS
WOODARD & CURRAN

THIS DOCUMENT OR THE PROPERTY OF WOODARD & CURRAN INC. AND ITS CLIENT. REPRODUCTION OF THIS DOCUMENT WITHOUT WRITTEN PERMISSION IS PROHIBITED.

MASSACHUSETTS DENIS F. CHAMPOUX REGISTERED LANDSCAPE ARCHITECT NO. 1512

REV	DESCRIPTION	DATE
0	CONFORMED SET	12/13/2019

DESIGNED BY: CCB/PAH
DRAWN BY: PAH
CHECKED BY: CCB
1723_L1_MA.DWG

LANDSCAPE MATERIALS PLAN ENLARGEMENT C

TOWN OF WINTHROP
1 METCALF SQUARE
WINTHROP, MASSACHUSETTS

CENTRE BUSINESS DISTRICT
INFRASTRUCTURE IMPROVEMENTS

JOB NO.:230079
DATE: DECEMBER 2019
SCALE: 1" = 20'-0"
SHEET: 35 OF 59

L1.3

M:\0-CBA-Cad\Parks\Winthrop Center Business District\CD\1723_L1_MA.dwg, July 31, 2019 - 2:35pm

22x34 SHEET
1:31.073

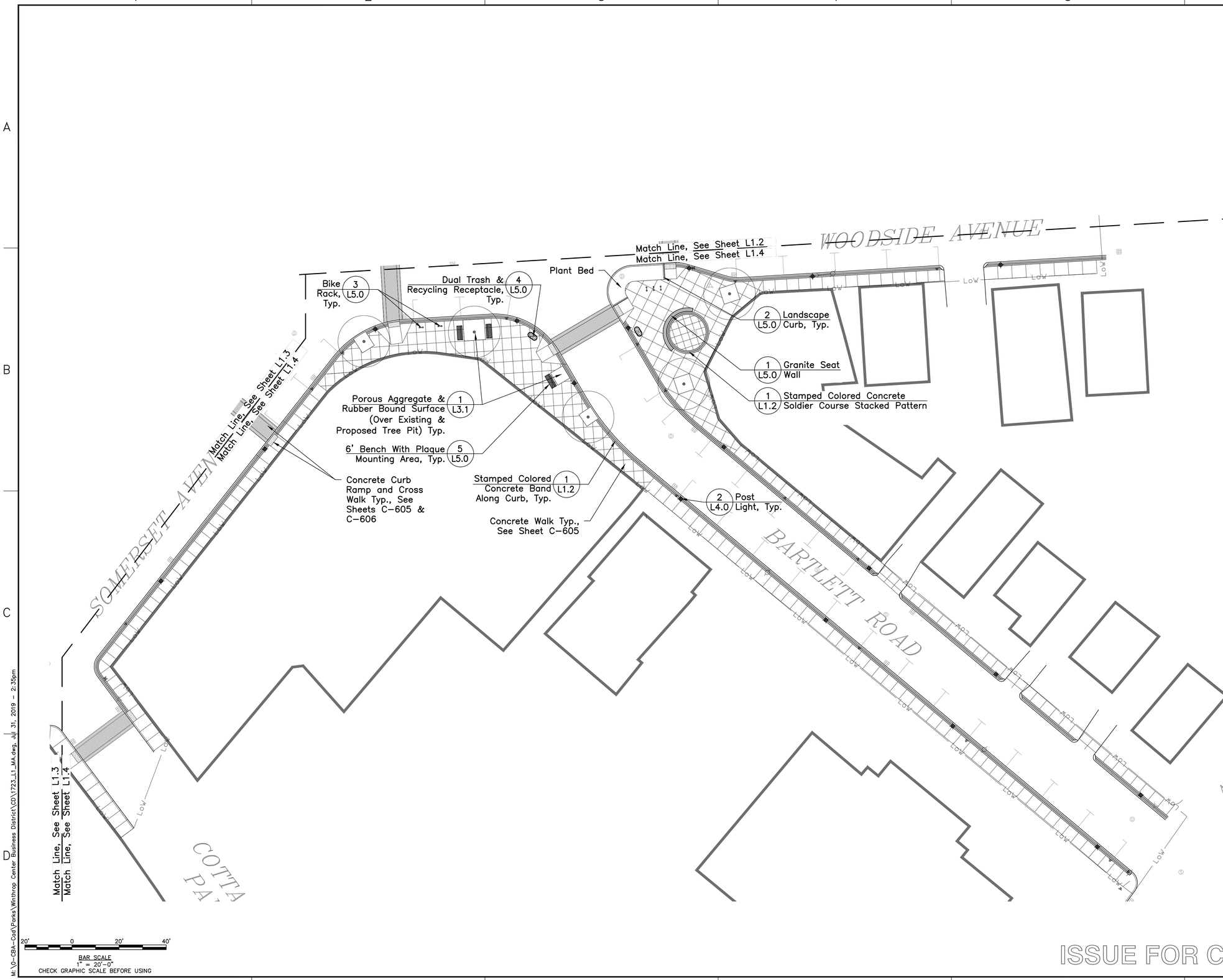

See Sheet L1.0 For Notes

All control joints spaced every 5'± (6' maximum), expansion joints every 30' (maximum), unless shown otherwise on plans. Locate expansion joints where paving abuts structures, curbs, walls, or colored concrete. See Sheet C-606 for expansion joint and control joint details.

LEGEND

- Property Line
- LoW — Limit of Work
- Edge of Structural Soil
- Typ. — Typical
- Vehicular Curb See Sheet C-300
- Landscape Curb
- Stamped Concrete Band
- Concrete Walk With Control/Exp. Joints
- Tactile Warning Strip, See Sheet C-606
- Existing Utility Pole
- Post Light
- Parking Lot Light
- 6' Bench
- Dual Trash & Recycle Receptacle
- Bike Rack
- Table With Metal Umbrella
- Drainage Structures, See 200 Series Plans
- Sewer Structure, See 200 Series Plans
- Fire Hydrant, See 200 Series Plans
- Street Sign, See Civil Sheet C-301
- Proposed Tree and Shrub
- Existing Tree to Remain

ISSUE FOR CONSTRUCTION

CBA | Landscape Architects LLC
24 THORNDIKE ST | CAMBRIDGE, MA 02141
phone 617.443.9160 | www.cbalandscape.com

40 Shattuck Road, Suite 110
Andover, Massachusetts 01810
866.702.6371|www.woodardcurran.com
WOODARD & CURRAN COMMITMENT & INTEGRITY DRIVE RESULTS

THIS DOCUMENT, THE PROPERTY OF WOODARD & CURRAN INC. AND ITS CLIENT, MAY BE RELIED UPON FOR THE PURPOSE(S) AGREED UPON BETWEEN THE PARTIES.
THIS DOCUMENT OR THE INFORMATION CONTAINED HEREIN SHALL NOT BE REPRODUCED OR USED FOR OTHER PURPOSES.

MASSACHUSETTS DENIS J. CRAWFORD NO. 1512 REGISTERED LANDSCAPE ARCHITECT

REV	DESCRIPTION	DATE
0	CONFORMED SET	12/13/2019

DESIGNED BY: CCB/PAH
DRAWN BY: PAH
CHECKED BY: CCB
1723_L1_MA.DWG

LANDSCAPE MATERIALS PLAN ENLARGEMENT D

TOWN OF WINTHROP
1 METCALF SQUARE
WINTHROP, MASSACHUSETTS

CENTRE BUSINESS DISTRICT
INFRASTRUCTURE
IMPROVEMENTS

JOB NO.:230079
DATE: DECEMBER 2019
SCALE: 1" = 20'-0"
SHEET: 36 OF 59

L1.4

M:\0-CBA-Cad\Parks\Winthrop Center Business District\CD\1723_L1_MA.dwg, Jul 31, 2019 - 2:35pm

22x34 SHEET
1:31.073

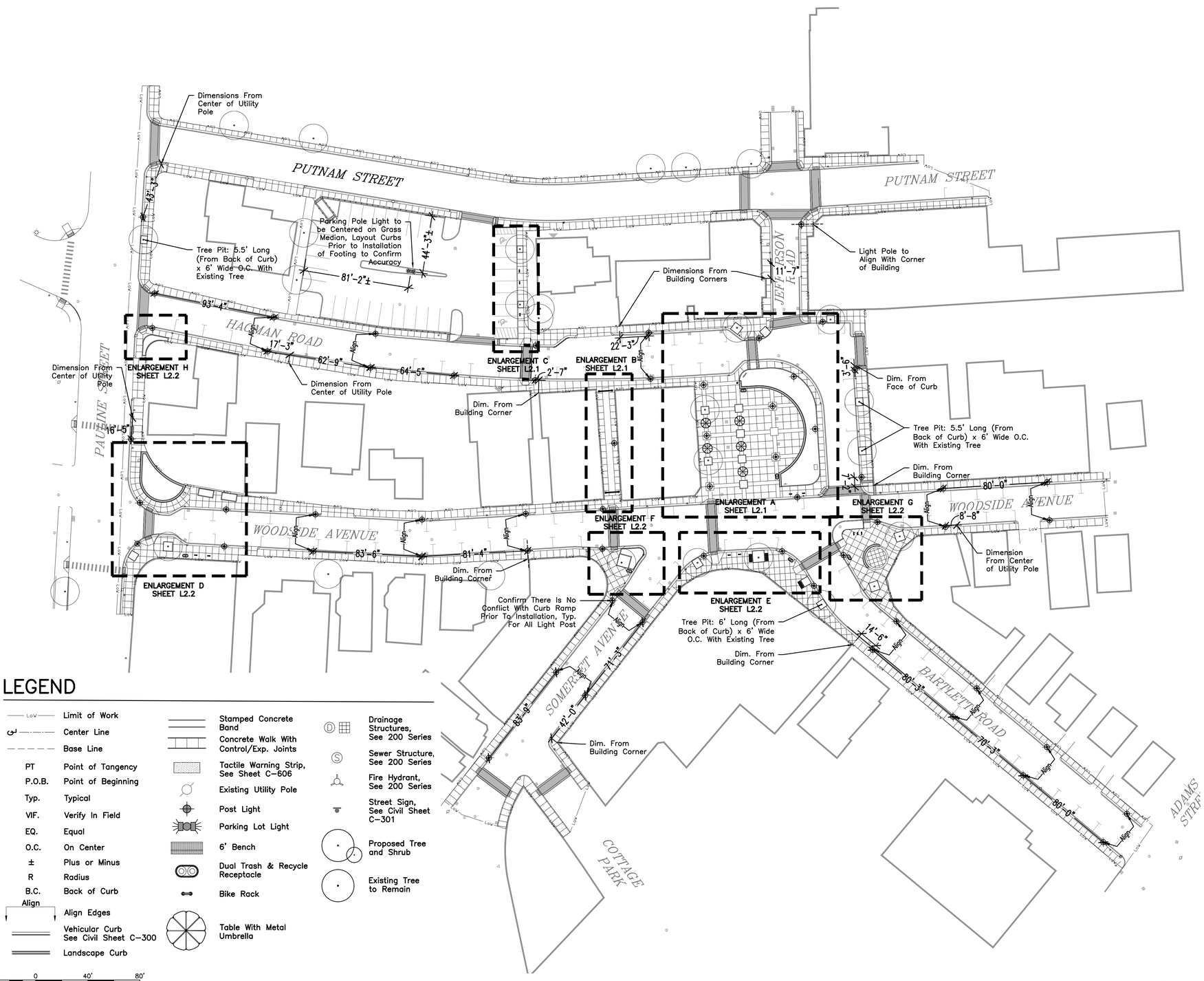

LAYOUT NOTES

1. See Civil Sheet C–300 for information regarding the street curb, signage locations and street marking.
2. The Contractor shall verify location of and protect all utilities, drainage, and sub–drainage structures. Call DIG–SAFE.
3. All layout to be done by a Registered Engineer or Land Surveyor.
4. Contractor shall verify all dimensions and elevations on the ground prior to commencement of construction, and shall immediately report any discrepancies to the Landscape Architect for clarification and resolution prior to commencement.
5. Contractor shall stake layout of plan on the site for approval of Landscape Architect before commencement of construction.
6. All layout shall be by the dimensions noted, or via AutoCAD/GPS; do not scale directly from the plan. If clarification regarding a dimension or layout order is required, the Contractor shall contact the Landscape Architect.
7. Dimensions are from face of curb & crossing dimension lines are at a 90° angle unless otherwise noted.
8. Dimensions marked with "±" and/or "(Confirm)" are intended for confirmation of conformance to the expected conditions and (where applicable) that acceptable slopes and clearances are provided. Once layout has been established using other dimensions, the Contractor shall verify these dimensions (to within a tolerance of 1/2") and report any discrepancy to the Landscape Architect for acceptance or instruction regarding adjustment. These dimensions should not be used to lay out elements.

Abutt light pole footing to back of curb unless noted otherwise. When laying out lights, confirm there is no conflict with curb ramps. Contact Owner's Representative if otherwise.

See Sheet E50.02, E60.01 and E80.01 for Electrical Site Plan, Electrical Schedule & Sections and Details

LEGEND

LoW	Limit of Work
	Center Line
	Base Line
PT	Point of Tangency
P.O.B.	Point of Beginning
Typ.	Typical
VIF.	Verify In Field
EQ.	Equal
O.C.	On Center
±	Plus or Minus
R	Radius
B.C.	Back of Curb
Align	Align Edges
	Vehicular Curb See Civil Sheet C–300
	Landscape Curb
	Stamped Concrete Band
	Concrete Walk With Control/Exp. Joints
	Tactile Warning Strip, See Sheet C–606
	Existing Utility Pole
	Post Light
	Parking Lot Light
	6' Bench
	Dual Trash & Recycle Receptacle
	Bike Rack
	Table With Metal Umbrella
D	Drainage Structures, See 200 Series
S	Sewer Structure, See 200 Series
	Fire Hydrant, See 200 Series
	Street Sign, See Civil Sheet C–301
	Proposed Tree and Shrub
	Existing Tree to Remain

40' 0 40' 80'
BAR SCALE
1" = 40'–0"
CHECK GRAPHIC SCALE BEFORE USING

ISSUE FOR CONSTRUCTION

CBA | Landscape Architects LLC
24 THORNDIKE ST | CAMBRIDGE, MA 02141
phone 617.876.1100 | www.cbalandscapes.com

WOODARD & CURRAN
40 Shattuck Road, Suite 110
Andover, Massachusetts 01810
866.702.6371|www.woodardcurran.com
COMMITMENT & INTEGRITY DRIVE RESULTS

THIS DOCUMENT, THE PROPERTY OF WOODARD & CURRAN INC. AND ITS CLIENT, IS THE SOLE PROPERTY OF THE CLIENT. REPRODUCTION OR USE FOR ANY PURPOSE OTHER THAN THOSE AUTHORIZED BY WOODARD & CURRAN INC. IS PROHIBITED.

MASSACHUSETTS
DAVID J. CHRISTOPHER
NO. 1512
REGISTERED LANDSCAPE ARCHITECT

REV	DESCRIPTION	DATE
0	CONFORMED SET	12/13/2019

DESIGNED BY: CCB/PAH
DRAWN BY: PAH
CHECKED BY: CCB
1723.L2.LA.DWG

LANDSCAPE OVERALL LAYOUT PLAN

TOWN OF WINTHROP
1 METCALF SQUARE
WINTHROP, MASSACHUSETTS

CENTRE BUSINESS DISTRICT
INFRASTRUCTURE
IMPROVEMENTS

JOB NO.:230079
DATE: DECEMBER 2019
SCALE: 1" = 40'–0"
SHEET: 37 OF 59

L2.0

M:\D–CBA–Coal\Parks\Winthrop Center Business District\CD\1723_L2_LA.dwg, Jul 31, 2019 – 2:35pm

22x34 SHEET
1:31.073

BASELINE: Starts at Northwest Corner of Existing Building (See P.O.B.) and Travels Northeast to Northeast Corner of Existing Building

BASELINE

Light Pole Footing to Abutt Back of Curb

Tree Pit to Meet Back of Curb

Tree Pit Centered on Existing Tree & Parallel to Curb

PT

Sign to be Perpendicular to Circle Radius; Landscape Architect or Owner's Representative to Direct Which Side of Interpretive Panel to Face Road

Flag Pole On Center

Waste Receptacle Centered Between Exp./Score Joints

Light Pole

5 Seat Table

6 Seat Table

P.O.B. From Building Corner

Park Sign

Light Pole Footing to Abutt Back of Curb

See Sheet L1.1 & L1.2 for stamped concrete pattern.

During construction, after the street curbs are installed, Contractor to provide Civil Engineer and Landscape Architect with spot grades every 10' on the curb and every 10' along the building. Civil Engineer to provide a detailed grading plan of this area after receiving detailed spot grades. Do not set seatwall, landscape curb or poured concrete until grading plan has been received by Contractor.

Enlargement A

Scale: ⅛" = 1'-0"

BAR SCALE 1/8" = 1'-0" CHECK GRAPHIC SCALE BEFORE USING

Enlargement B

Scale: ⅛" = 1'-0"

P.O.B. Building Corner

Light Pole Footing to Abutt Back of Curb

Enlargement C

Scale: ⅛" = 1'-0"

Tree Pit Around Existing Tree

P.O.B. Outside Edge of Curb

Light Pole Footing to Abutt Back of Curb

KEY PLAN

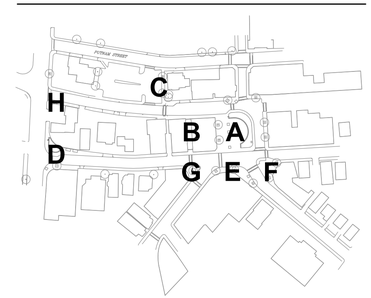

LEGEND

Limit of Work	
Center Line	
Base Line	
PT	Point of Tangency
P.O.B.	Point of Beginning
Typ.	Typical
VIF.	Verify In Field
EQ.	Equal
O.C.	On Center
±	Plus or Minus
R	Radius
B.C.	Back of Curb
Align	Align Edges
	Vehicular Curb See Civil Sheet C-300
	Landscape Curb
	Stamped Concrete Band
	Concrete Walk With Control/Exp. Joints
	Tactile Warning Strip, See Sheet C-606
	Existing Utility Pole
	Post Light
	Parking Lot Light
	6' Bench
	Dual Trash & Recycle Receptacle
	Bike Rack
	Table With Metal Umbrella
	Drainage Structures, See 200 Series
	Sewer Structure, See 200 Series
	Fire Hydrant, See 200 Series
	Street Sign, See Civil Sheet C-301
	Proposed Tree and Shrub
	Existing Tree to Remain

See Sheet L2.0 For Notes

ISSUE FOR CONSTRUCTION

CBA Landscape Architects LLC
24 THORNDIKE ST | CAMBRIDGE, MA 02141
phone 617.876.5170 | fax 617.876.5171 | www.cbalandscape.com

40 Shattuck Road, Suite 110
Andover, Massachusetts 01810
866.702.6371|www.woodardcurran.com
WOODARD & CURRAN COMMITMENT & INTEGRITY DRIVE RESULTS

THIS DOCUMENT IS THE PROPERTY OF WOODARD & CURRAN INC. AND ITS CLIENT. REUSE OF THIS DOCUMENT OR INFORMATION IN IT WITHOUT WRITTEN AUTHORIZATION IS PROHIBITED.

MASSACHUSETTS DENIS J. CHAGNON NO. 1512 REGISTERED LANDSCAPE ARCHITECT

REV	DESCRIPTION	DATE
0	CONFORMED SET	12/13/2019

DESIGNED BY: CCB/PAH
DRAWN BY: PAH
CHECKED BY: CCB

LANDSCAPE LAYOUT ENLARGEMENT PLAN (A,B,C)

TOWN OF WINTHROP
1 METCALF SQUARE
WINTHROP, MASSACHUSETTS

CENTRE BUSINESS DISTRICT INFRASTRUCTURE IMPROVEMENTS

JOB NO.:230079
DATE: DECEMBER 2019
SCALE: 1/8" = 1'-0"
SHEET: 38 OF 59

L2.1

22x34 SHEET
1:31.073

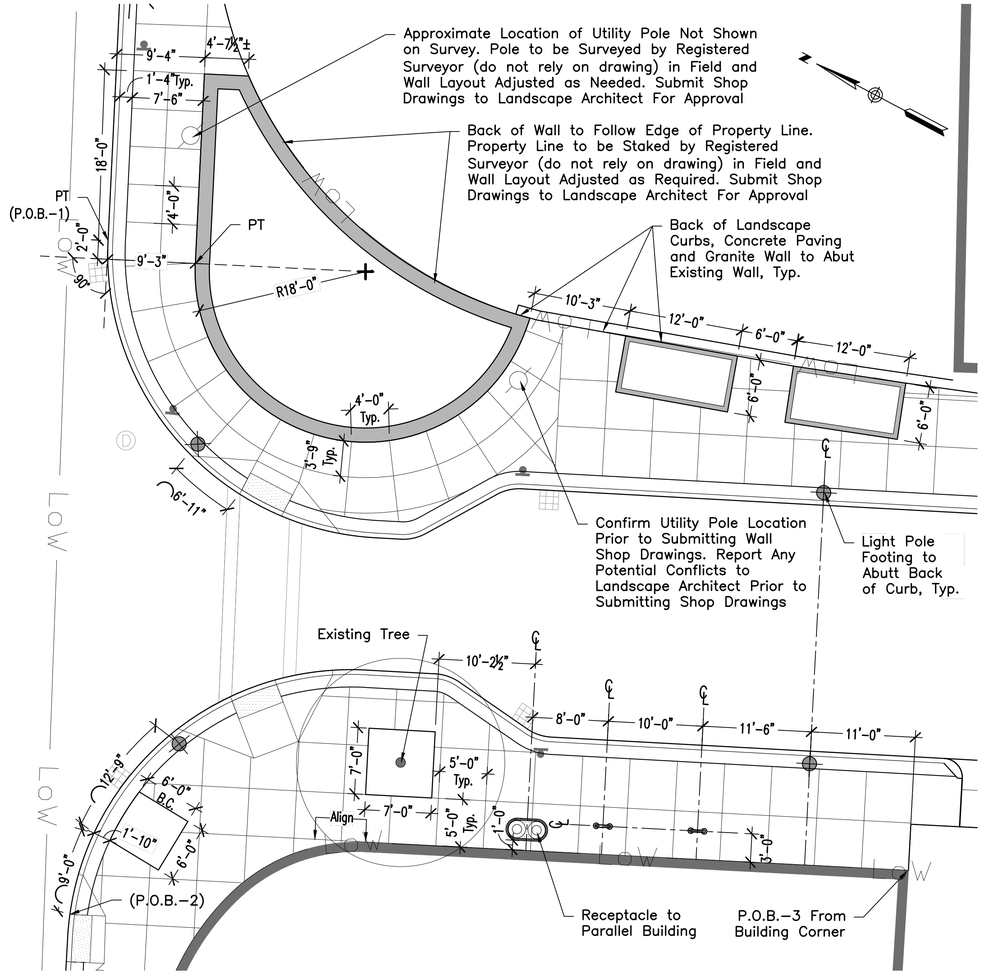

Enlargement D

Scale: 1/8" = 1'-0"

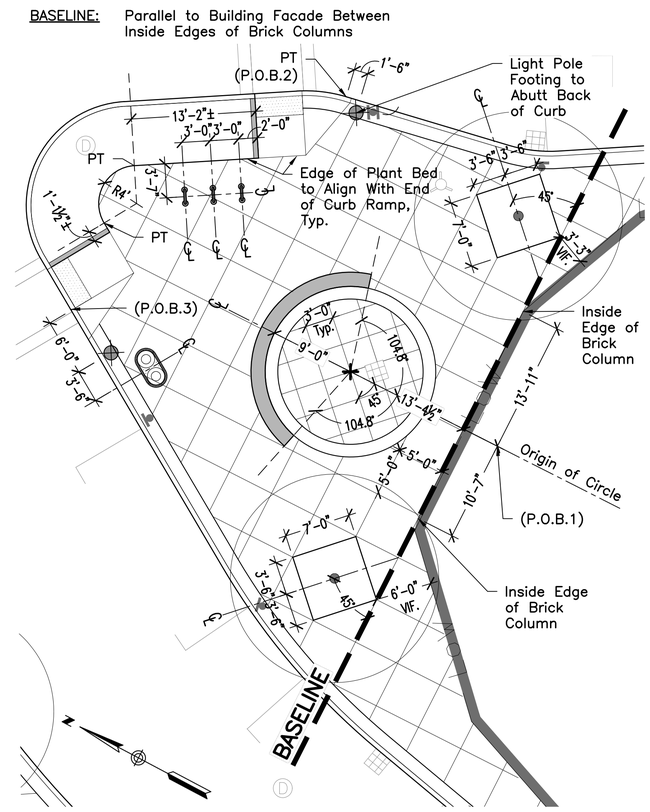

Enlargement F

Scale: 1/8" = 1'-0"

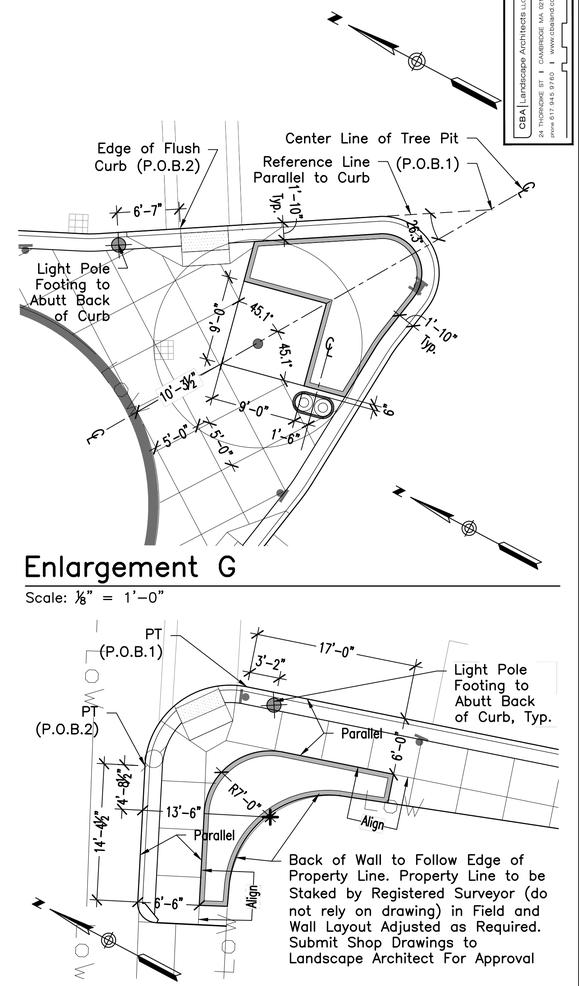

Enlargement G

Scale: 1/8" = 1'-0"

Enlargement H

Scale: 1/8" = 1'-0"

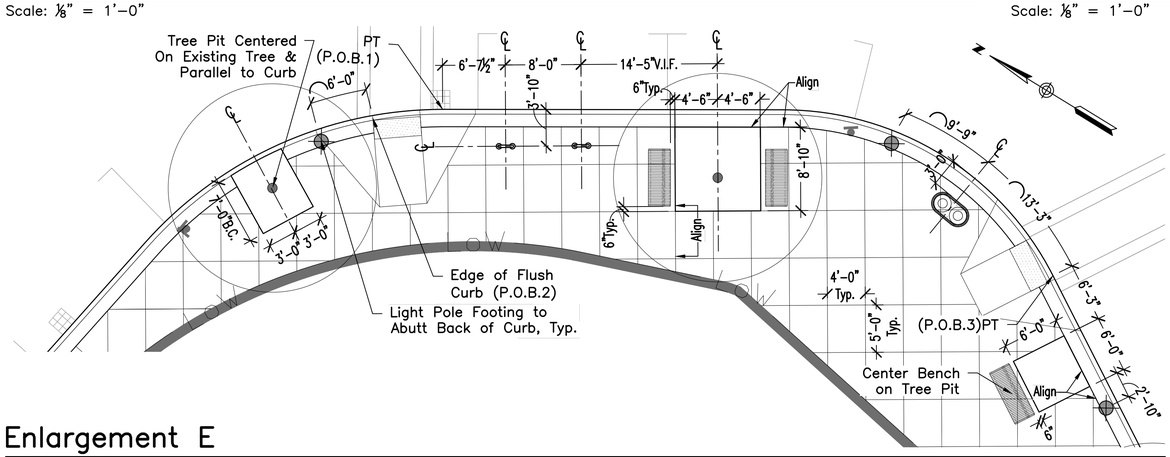

Enlargement E

Scale: 1/8" = 1'-0"

BAR SCALE
1/8" = 1'-0"
CHECK GRAPHIC SCALE BEFORE USING

KEY PLAN

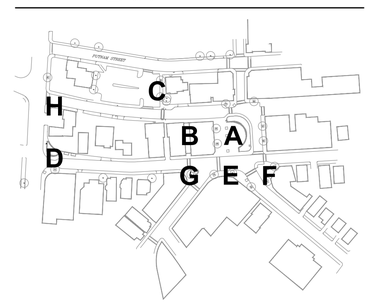

LEGEND

LOW	Limit of Work
	Center Line
	Base Line
PT	Point of Tangency
P.O.B.	Point of Beginning
Typ.	Typical
VIF.	Verify In Field
EQ.	Equal
O.C.	On Center
±	Plus or Minus
R	Radius
B.C.	Back of Curb
Align	Align Edges
	Vehicular Curb See Civil Sheet C-300
	Landscape Curb
	Stamped Concrete Band
	Concrete Walk With Control/Exp. Joints
	Tactile Warning Strip, See Sheet C-606
	Existing Utility Pole
	Post Light
	Parking Lot Light
	6' Bench
	Dual Trash & Recycle Receptacle
	Bike Rack
	Table With Metal Umbrella
	Drainage Structures, See 200 Series
	Sewer Structure, See 200 Series
	Fire Hydrant, See 200 Series
	Street Sign, See Civil Sheet C-301
	Proposed Tree and Shrub
	Existing Tree to Remain

See Sheet L2.0 For Notes

ISSUE FOR CONSTRUCTION

CBA | Landscape Architects LLC
24 THORNDIKE ST | CAMBRIDGE, MA 02141
phone 617.410.9160 | www.cbalandscapes.com

40 Shattuck Road, Suite 110
Andover, Massachusetts 01810
866.702.6371|www.woodardcurran.com
WOODARD & CURRAN COMMITMENT & INTEGRITY DRIVE RESULTS

THIS DOCUMENT OF THE PROPERTY OF WOODARD & CURRAN INC. AND ITS CLIENT. THIS DOCUMENT OR ANY PORTION THEREOF, MAY NOT BE REPRODUCED OR USED WITHOUT WRITTEN CONSENT OF W&C.

MASSACHUSETTS REGISTERED LANDSCAPE ARCHITECT NO. 1512 DENIS J. CHAMPION

REV	DESCRIPTION	DATE
0	CONFORMED SET	12/13/2019

DESIGNED BY: CCB/PAH
DRAWN BY: PAH
CHECKED BY: CCB
1723.12.LA.DWG

LANDSCAPE LAYOUT
ENLARGEMENT PLAN (D,E,F,G,H)

TOWN OF WINTHROP
1 METCALF SQUARE
WINTHROP, MASSACHUSETTS

CENTRE BUSINESS DISTRICT
WATERFRONT TRIANGLE
IMPROVEMENTS

JOB NO.:230079
DATE: DECEMBER 2019
SCALE: 1/8" = 1'-0"
SHEET: 39 OF 59

L2.2

M:\0-CBA-Cad\Parks\Winthrop Center Business District\CD\1723_L2_LA.dwg, Jul 31, 2019 - 2:36pm

22x34 SHEET
1:31.073

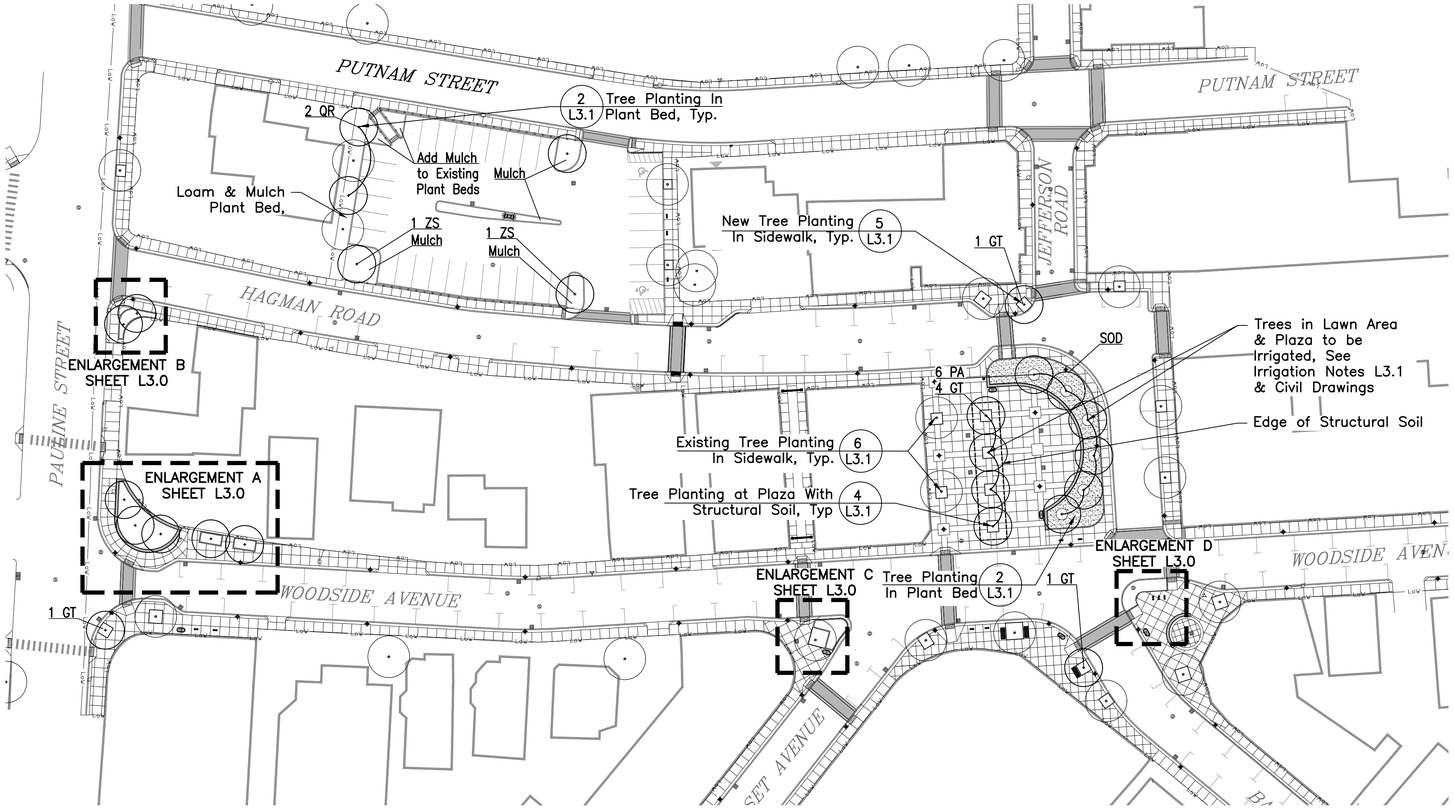

Overall Plan

Scale: 1" = 40'-0"

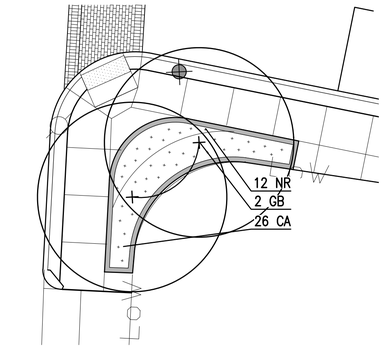

Enlargement B

Scale: ⅛" = 1'-0"

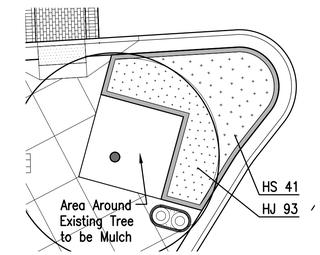

Enlargement C

Scale: ⅛" = 1'-0"

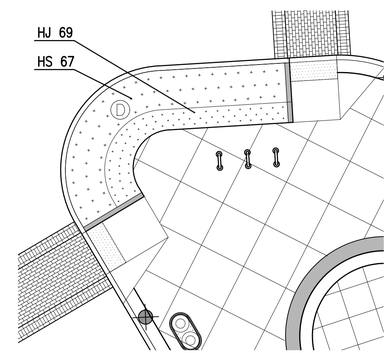

Enlargement D

Scale: ⅛" = 1'-0"

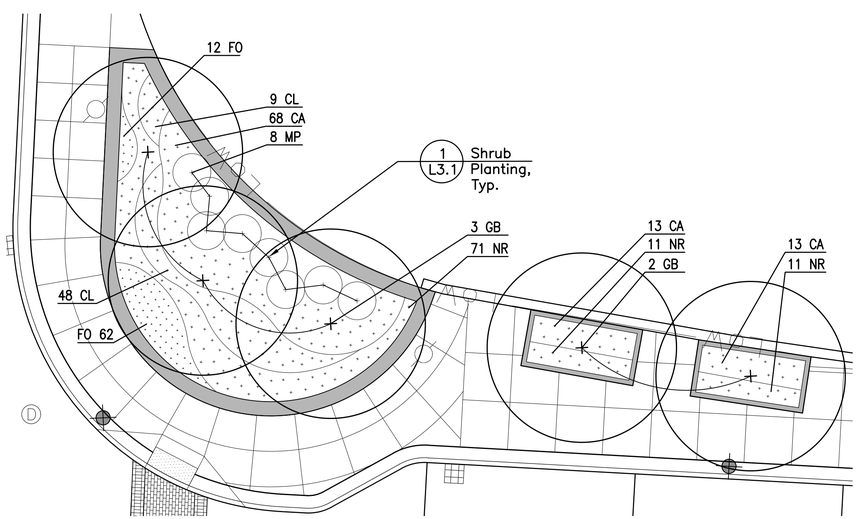

Enlargement A

Scale: ⅛" = 1'-0"

PLANT LIST

TREES

SYM	QTY	BOTANICAL NAME	COMMON NAME	SIZE	NOTES
GB	7	Ginko biloba 'Autumn Gold'	Autumn Gold Maidenhair Tree	3.5"-4" CAL.	Males Only
GT	7	Gleditsia t.i. 'Halka"	Halka Honeylocust	3.5"-4" CAL.	
QR	2	Quercus rubra	Red Oak	3.5"-4" CAL.	
PA	6	Platanus acerifolia 'Exclamation'	Exclamation London Planetree	3.5"-4" CAL.	
ZS	3	Zelkova serrata 'Green Vase'	Green Vase Zelkova	3.5"-4" CAL.	

SHRUBS

SYM	QTY	BOTANICAL NAME	COMMON NAME	SIZE	NOTES
MP	8	Myrica pensylvanica	Northern Bayberry	3'-4'	Full & Bushy

PERENNIALS

SYM	QTY	BOTANICAL NAME	COMMON NAME	SIZE	NOTES
CA	120	Calamagrostis x acutiflora 'Karl Foerster'	Karl Foerster Feather Reed Grass	#2 Pot	
CL	57	Chasmanthium latifolium	Northern Sea Oats	#2 Pot	
FO	74	Festuca ovina	Elijah Blue Fescue	#1 Pot	
HS	108	Hemerocallis 'Stella d'Oro'	Stella d'Oro Day Lily	#2 Pot	
HJ	153	Hosta 'June Fever'	June Fever Plant Lily	#1 Pot	
NR	105	Nepeta racemosa 'Walker's Low'	Walker's Low Catmint	#2 Pot	

SEED MIX

Type

Sod Mix to be Black Beauty Ultra by Sodco or Approved Equal

70% Tall Fescues, 20% Perennial Ryegrass, 10% Kentucky Bluegrass

Sodco:
Address: P.O. Box 2, 264 Exeter Road, Slocum, RI 02877
Phone: (800) 341-6900 Website: www.sodco.net

See Sheet L3.1
For Notes And Details

LEGEND

- Limit of Work
- Edge of Structural Soil
- Sod
- Shrubs & Perennials
- Existing Tree to Remain
- Vehicular Curb See Civil Sheet C-300
- Landscape Curb
- Stamped Concrete Band
- Concrete Walk With Control/Exp. Joints
- Tactile Warning Strip, See Sheet C-606
- Existing Utility Pole
- Post Light
- Parking Lot Light
- 6' Bench
- Dual Trash & Recycle Receptacle
- Bike Rack
- Table With Metal Umbrella
- Drainage Structures, See 200 Series Plans
- Sewer Structure, See 200 Series Plans
- Fire Hydrant, See 200 Series Plans
- Street Sign, See Civil Sheet C-301

ISSUE FOR CONSTRUCTION

CBA | Landscape Architects LLC
24 THORNDIKE ST | CAMBRIDGE, MA 02141
phone 617.443.9765 | www.cbalandscape.com

40 Shattuck Road, Suite 110
Andover, Massachusetts 01810
866.702.6371|www.woodardcurran.com
COMMITMENT & INTEGRITY DRIVE RESULTS
WOODARD & CURRAN

THIS DOCUMENT, THE PROPERTY OF WOODARD & CURRAN INC., AND ITS CLIENT, IS THE DOCUMENT OF WOODARD & CURRAN INC. AND MAY NOT BE REPRODUCED, REPRODUCED, OR TRANSMITTED WITHOUT WRITTEN PERMISSION.

MASSACHUSETTS DENIS J. CHOMICKI NO. 1512 REGISTERED LANDSCAPE ARCHITECT

REV	DESCRIPTION	DATE
0	CONFORMED SET	12/13/2019

DESIGNED BY: CCB/PAH
DRAWN BY: PAH
CHECKED BY: CCB
1723_L3_PL.DWG

PLANTING PLAN

TOWN OF WINTHROP
1 METCALF SQUARE
WINTHROP, MASSACHUSETTS

CENTRE BUSINESS DISTRICT
INFRASTRUCTURE
IMPROVEMENTS

JOB NO.:230079
DATE: DECEMBER 2019
SCALE: VARIES
SHEET: 40 OF 59

L3.0

M:\0-CBA-Cad\Parks\Winthrop Center Business District\CD\1723_L3_PL.dwg, Jul 31, 2019 - 2:36pm

22x34 SHEET
1:31.073

PLANTING NOTES

1. The Contractor shall protect all utilities prior to starting construction.
2. The Contractor shall supply all plant materials in quantities sufficient to complete all planting shown on this drawing.
3. All plant materials to conform to guidelines established by the American Standard for Nursery Stock published by the American Assn. of Nurserymen.
4. Landscape Architecture to tag all trees and shrubs at nursery and approve all plant materials on site prior to installation.
5. All plants to be placed or staked on the site for approval by the Landscape Architect prior to installation.
6. If the Plant List does not agree with the Planting Plan, the Plan shall be followed.
7. All plant beds to receive 3" un-dyed shredded pine bark mulch; supply sample for approval by Landscape Architect.
8. No substitution of plant materials shall be allowed without approval of Landscape Architect.
9. The Contractor shall guarantee all plant materials for two years, meadow mix and lawns for one year following final acceptance. See Specifications for conditions of final acceptance.
10. Maintenance shall begin immediately after an area is planted and shall continue until final acceptance. The minimum maintenance period shall be ninety (90) calendar days after completion of all plant installations. Watering and mowing shall be done by the Contractor for the full 90 days.
11. All planting beds to have a minimum 12" depth of topsoil.
12. Any existing street tree shown to remain on the planting plan that has to be removed through course of construction shall be replaced with either Gleditsia t.i. 'Halka' or Plantanus acerifolia per Landscape Architects direction. Tree size to match those shown on the plant list.
13. Existing street trees that are to remain should be pruned by a Certified Arborist. See specifications.

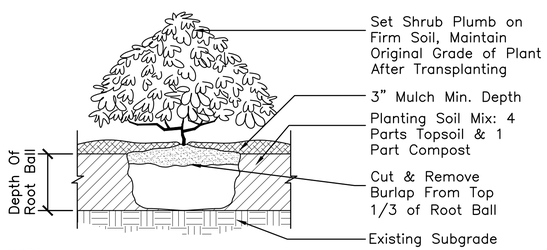

NOTE:
1. New shrub beds to have a minimum of one foot planting soil.

1 Shrub Planting

Scale: ½" = 1'-0"

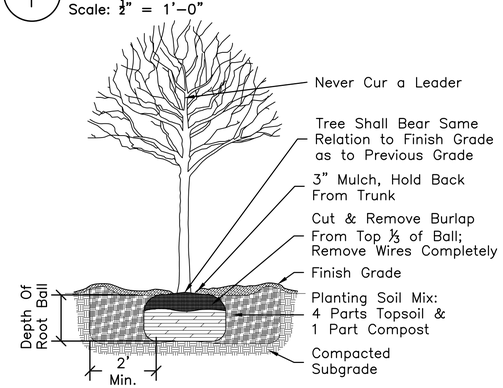

Notes:
1. Each tree to have watering bag.
2. Trees planted in sod area to have 6' dia mulch ring.

2 Tree Planting In Plant Bed

Scale: ⅜" = 1'-0"

IRRIGATION NOTES

1. Irrigation System to be design/build. irrigation company and design to be approved by landscape architect; provide plan for approval, before installation begins. see specifications, section 32 80 00.
2. Control box and clock to be approved and shall be sized to provide 100% coverage of all proposed planting beds and lawns. control box to have a maximum of ten (10) zones and to be located within the new water cabinet.
3. 'Pop-up' or rotary spray heads for use in lawn area. Trees in plaza with structural soil to have drip irrigation.
4. Irrigation system to be guaranteed for one (1) year following installation. contractor to provide first winterization and spring start up.
5. Contractor to provide irrigation sleeves under paved areas. seal all pipe ends and joints tightly.
6. Contractor to provide an "as-built plan", which includes sleeve locations, zone information and operation instructions.
7. Location of rain gauge to be determined in field with landscape architect and owner's representative.
8. One irrigation "zone" shall be used to provide a time-controlled valve on the spray feature line, in order to limit spray operation to official park hours.

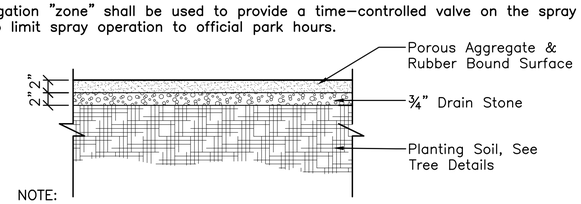

NOTE:
1. Porous Aggregate & Rubber Bound Surface by Porous Pave, 4385 East 110th Street, Grant, MI 49327 Ph:(800)448-3873 Email: sales@porouspaveinc.com or Approved Equal
2. Leave 4" space from edge of porous surface to root flare for new trees, and 2" space for existing trees.
3. Color to be selected by Landscape Architect.
4. Must be installed by Certified Porous Pave personnel or authorized agent from the date of the installation.
5. Carefully work around root systems of existing trees when installing porous surface. NO TREE ROOTS SHOULD BE CUT.

3 Porous Aggregate & Rubber Bound Surface

Scale: 1"=1'-0"

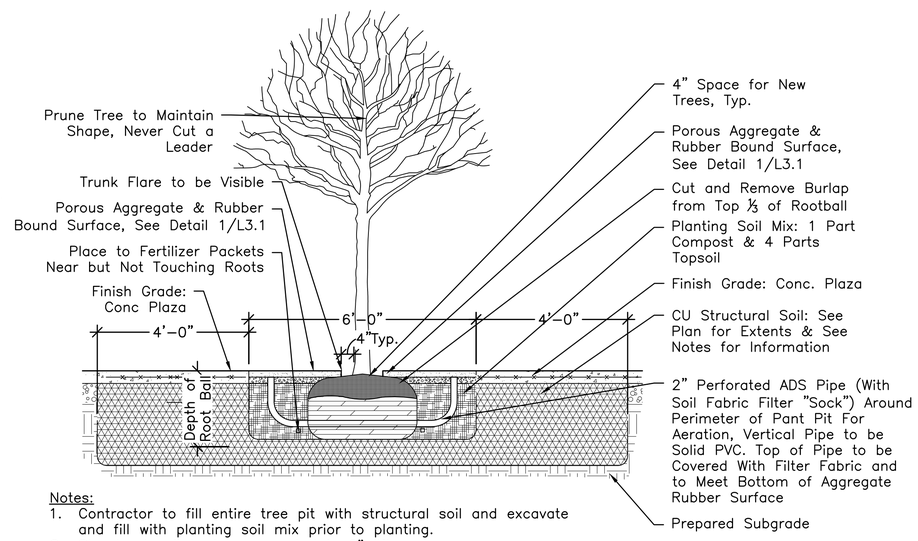

Notes:
1. Contractor to fill entire tree pit with structural soil and excavate and fill with planting soil mix prior to planting.
2. Structural soil to be compacted in 6" lifts.
3. Structural soil to be CU-Soil (TM) from Read Custom Soils / Hingham, MA / Phone: 1-800-924-5335 or Approved Equal. Provide sample for approval prior to ordering.
4. Extent of structural soils shown on materials plan.
5. Tree to be irrigated, see irrigation notes.
6. Carefully work around root systems of trees when installing porous aggregate and rubber bond surface. NO TREE ROOTS SHOULD BE CUT

4 Tree Planting at Plaza With Structural Soil

Scale: ½" = 1'-0"

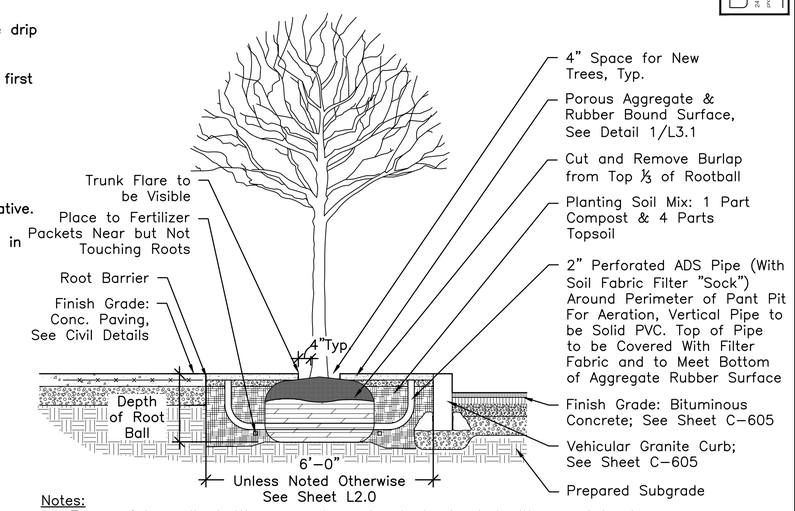

Notes:
1. Edges of tree pit abutting concrete paving to be treated with a root barrier. Contractor to submit product literature for approval by Landscape Architect.
2. Each tree to have watering bag.
3. Carefully work around root systems of trees when installing porous aggregate and rubber bond surface. NO TREE ROOTS SHOULD BE CUT

5 Tree Planting in Sidewalk

Scale: ½" = 1'-0"

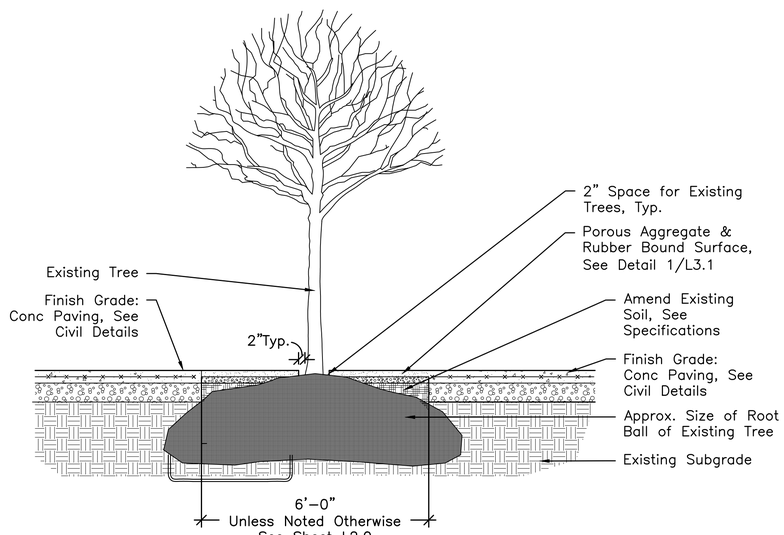

Notes:
1. Hand work only when working under drip lines of existing trees.
2. Carefully work around root systems of existing trees when installing porous aggregate and rubber bond surface. NO TREE ROOTS SHOULD BE CUT

6 Existing Tree In Sidewalk

Scale: ½" = 1'-0"

ISSUE FOR CONSTRUCTION

CBA | Landscape Architects LLC
24 THORNDIKE ST | CAMBRIDGE, MA 02141
phone 617.443.9160 | www.cbalandscape.com

40 Shattuck Road, Suite 110
Andover, Massachusetts 01810
866.702.6371|www.woodardcurran.com
WOODARD & CURRAN COMMITMENT & INTEGRITY DRIVE RESULTS

THIS DOCUMENT IS THE PROPERTY OF WOODARD & CURRAN INC. AND ITS CLIENT. THIS DOCUMENT OR THE INFORMATION CONTAINED HEREIN MAY NOT BE REPRODUCED, DISTRIBUTED, OR PUBLISHED WITHOUT WRITTEN CONSENT.

MASSACHUSETTS DENIS F. CHAMPION REGISTERED LANDSCAPE ARCHITECT NO. 1512

REV	DESCRIPTION	DATE
0	CONFORMED SET	12/13/2019

DESIGNED BY: CCB/PAH
DRAWN BY: PAH
CHECKED BY: CCB
1723_L3_PL.DWG

LANDSCAPE PLANTING DETAILS & NOTES

TOWN OF WINTHROP
1 METCALF SQUARE
WINTHROP, MASSACHUSETTS

CENTRE BUSINESS DISTRICT
INFRASTRUCTURE IMPROVEMENTS

JOB NO.:230079
DATE: DECEMBER 2019
SCALE: VARIES
SHEET: 41 OF 59

L3.1

M:\0-CBA-Cad\Parks\Winthrop Center Business District\CD\1723_L3_PL.dwg, Jul 31, 2019 - 2:36pm

22x34 SHEET
1:31.073

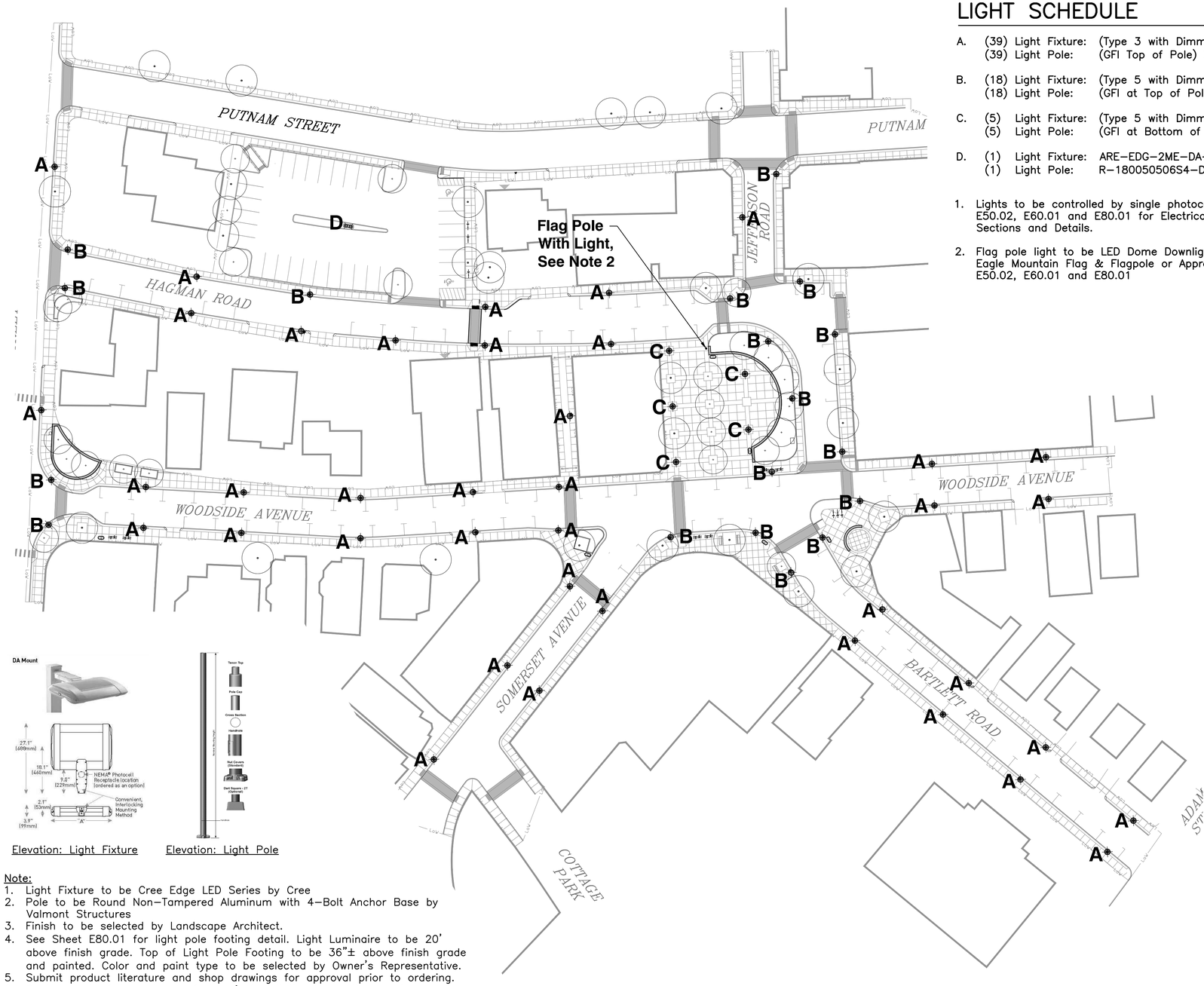

LIGHT SCHEDULE

A. (39) Light Fixture: (Type 3 with Dimmer) PT-1843LED-4ARC30T3-MDL03-SV1-BK-CC
(39) Light Pole: (GFI Top of Pole) 3512FP5-.250/GFILP-IUC/BK-CC-FDRB

B. (18) Light Fixture: (Type 5 with Dimmer) PT-1843LED-4ARC30T5-MDL03-SV1-BK-CC
(18) Light Pole: (GFI at Top of Pole) 3512FP5-.250/GFILP-IUC/BK-CC-FDRB

C. (5) Light Fixture: (Type 5 with Dimmer) PT-1843LED-4ARC30T5-MDL03-SV1-BK-CC
(5) Light Pole: (GFI at Bottom of Pole) 3512FP5-.250/GFILP-IUC/BK-CC-FDRB

D. (1) Light Fixture: ARE-EDG-2ME-DA-08-E-UL-BK-525
(1) Light Pole: R-180050506S4-D2-CREEBLACK-AB-FBC (Manufacturer to Cut Pole to 17')

1. Lights to be controlled by single photocell or astronomical clock. See Sheet E50.02, E60.01 and E80.01 for Electrical Site Plan, Electrical Schedule & Sections and Details.

2. Flag pole light to be LED Dome Downlight Model Number DM3K-IHNR by Eagle Mountain Flag & Flagpole or Approved Equal, See Sheet C-607, E50.02, E60.01 and E80.01

Elevation: Light Fixture Elevation: Light Pole

Note:
1. Light Fixture to be Cree Edge LED Series by Cree
2. Pole to be Round Non-Tampered Aluminum with 4-Bolt Anchor Base by Valmont Structures
3. Finish to be selected by Landscape Architect.
4. See Sheet E80.01 for light pole footing detail. Light Luminaire to be 20' above finish grade. Top of Light Pole Footing to be 36"± above finish grade and painted. Color and paint type to be selected by Owner's Representative.
5. Submit product literature and shop drawings for approval prior to ordering.
6. Contractor to follow all manufacturer's installation instructions and specifications.

1 Parking Lot Light (D)

N.T.S.

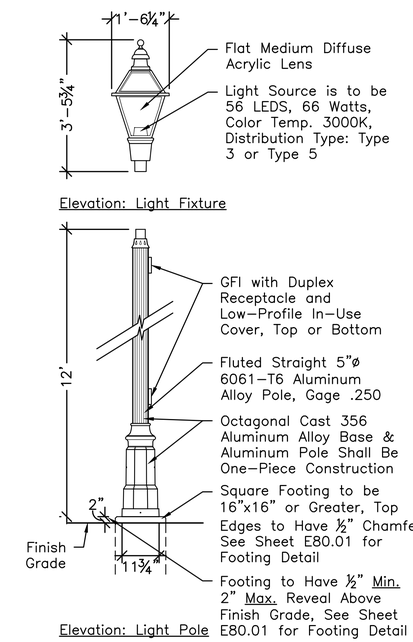

Elevation: Light Fixture

Elevation: Light Pole

Note:
1. Light Fixture to be 1843LED Carson City Series by Sternberg Lighting
2. Pole to be 3500 Charlestone Series by Sternberg Lighting
3. Finish to be Black Powder Coat.
4. See Sheet E80.01 for light pole footing detail.
5. Submit product literature and shop drawings for approval prior to ordering.
6. Contractor to follow all manufacturer's installation instructions and specifications.
7. See Sheet's L2.0, L2.1 & L2.2 for layout dimensions.

2 Post Light (A,B,C)

Scale: ½" = 1'-0"

40' 0 40' 80'
BAR SCALE
1" = 40'-0"
CHECK GRAPHIC SCALE BEFORE USING

ISSUE FOR CONSTRUCTION

CBA | Landscape Architects LLC
24 THORNDIKE ST | CAMBRIDGE, MA 02141
phone 617.443.9765 | www.cbalandscapes.com

40 Shattuck Road, Suite 110
Andover, Massachusetts 01810
866.702.6371|www.woodardcurran.com
WOODARD & CURRAN COMMITMENT & INTEGRITY DRIVE RESULTS

THIS DOCUMENT, THE PROPERTY OF WOODARD & CURRAN INC. AND ITS CLIENT, IS INTENDED FOR THE USE OF THE CLIENT AND FOR A SPECIFIC PROJECT ONLY.

MASSACHUSETTS REGISTERED LANDSCAPE ARCHITECT NO. 1512 DENIS J. CRAWFORD

REV	DESCRIPTION	DATE
0	CONFORMED SET	12/13/2019

DESIGNED BY: CCB/PAH
DRAWN BY: PAH
CHECKED BY: CCB
1723_L4_LI.DWG

LANDSCAPE LIGHTING PLAN

TOWN OF WINTHROP
1 METCALF SQUARE
WINTHROP, MASSACHUSETTS

CENTRE BUSINESS DISTRICT
INFRASTRUCTURE
IMPROVEMENTS

JOB NO.:230079
DATE: DECEMBER 2019
SCALE: 1" = 40'-0"
SHEET: 42 OF 59

L4.0

M:\0-CBA-Cad\Parks\Winthrop Center Business District\CD\1723_L4_LI.dwg, Jul 31, 2019 - 2:37pm

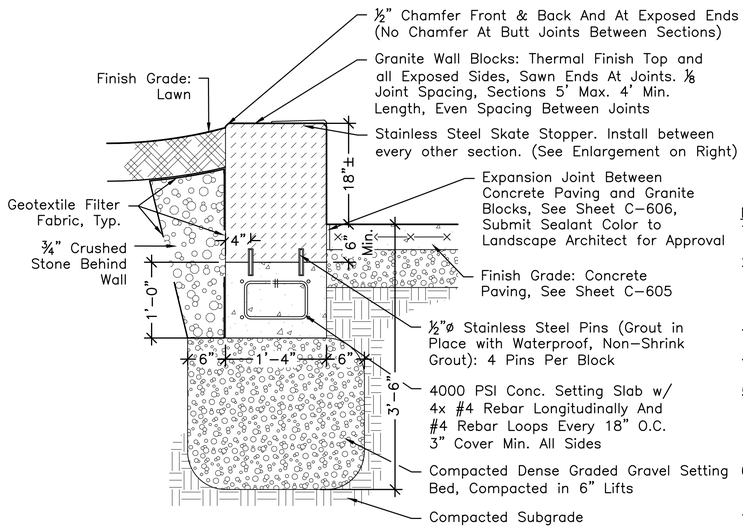

SKATE STOPPER ENLARGEMENT
NOT TO SCALE

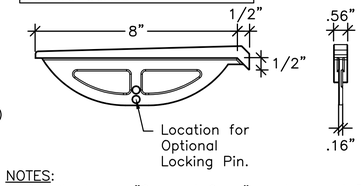

NOTES:
1. Granite to be "Concord Grey," or Approved Equal. Provide sample of granite for approval.
2. SHOP DRAWINGS REQUIRED showing block lengths, radii, and end/face treatments to confirm layout. Submit drawings for approval by Landscape Architect before ordering material.
3. Landscape Architect to provide contractor with a CAD file showing wall with radius cuts.
4. Filter Fabric to be Mirafi 140N or approved equal.
5. Skate Stoppers to be D-135-8 (for ½" Chamfer) 316 Stainless Steel Insert by Skate Stoppers, 1547 N. Cuyamaca Street, El Cajon, CA 92020, ph: 619-447-6374, web: www.skatestoppers.com. or approved equal.
6. Skate Stoppers to be installed between every granite section. Follow all manufacturer's instructions for installation.
7. Deep raked mortar joints between granite blocks. Color to be approved by Landscape Architect

1 Granite Seat Wall
Scale: 1" = 1'-0"

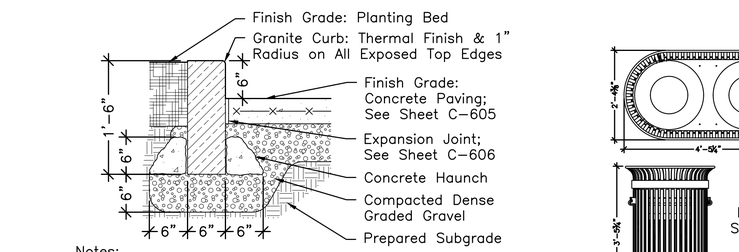

Notes:
1. Granite curb to have a thermal finish on all exposed sides.
2. All exposed top corners of curb to have a 1" radius.
3. Curb sample to be approved by Landscape Architect prior to ordering.

2 Landscape Curb
Scale: 1" = 1'-0"

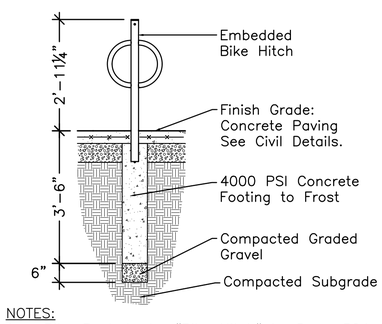

NOTES:
1. Bike Rack to be "Bike Hitch" by Dero, 504 Malcolm Ave SE Suite 100, Minneapolis, MN 55414 (ph. 888-337-6729 or 617-869-5408) or Approved Equal.
2. Stainless Steel finish, per manufacturer.

3 Bicycle Rack
Scale: ½" = 1'-0"

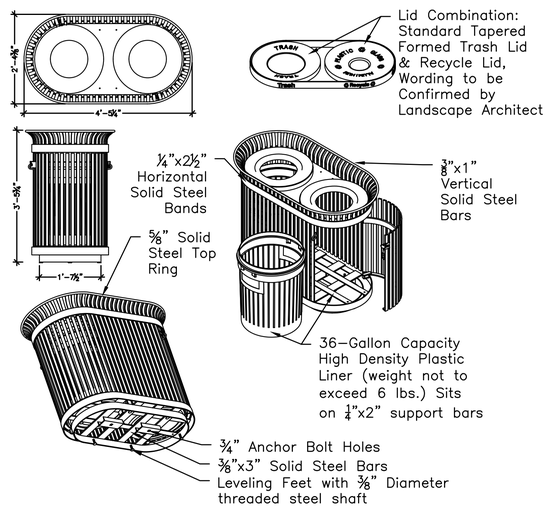

NOTES:
1. Litter and Recyling Receptacle to be SD-242 Ironsites Series by Victor Stanley (301-855-8300 or www.victorstanley.com), or equivalent model by DuMor (Locally represented by M.E. O'Brien; Tel. 800-835-0056), or Approved Equal.
2. Receptacle shall fit two (2) 36-gallon liners.
3. Powdercoat color to be selected by Landscape Architect from manufacturer's full color range.
4. This product is shipped fully assembled.
5. Anchor bolts not provided by Manufacturer.
6. Follow manufacturer's instructions for surface mount installation.

4 Dual Trash & Recycling Receptacle
Scale: ½"=1'-0" or As Noted

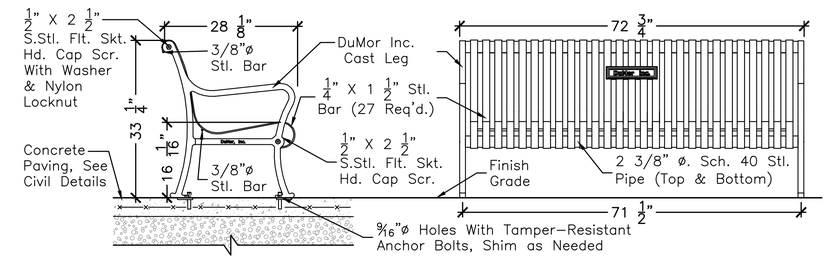

SURFACE MOUNT

NOTES:
1. Benches to be by DuMor, Inc., Mifflintown, PA, ph. 1.800.598.4018. Model #93-60-Q01 (Surface Mount Option) or Approved Equal.
2. All steel members to be galvanized and have a polyester powder coated. Color to be selected by Landscape Architect. Touch-up paint kit to be provided.
3. All welds to be continuous and then ground smooth.
4. All benches shall be shipped fully assembled.

SHOP DRAWINGS REQUIRED

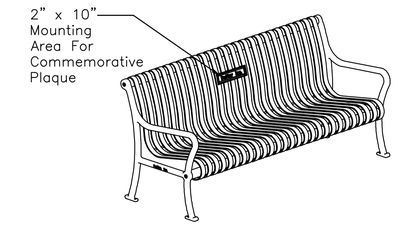

5 6' Bench With Plaque Mounting Area
SCALE: 3/4" = 1'-0"

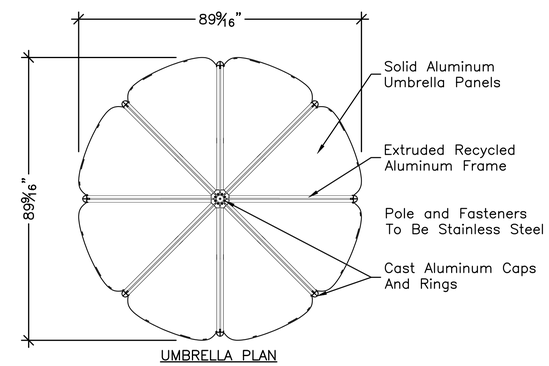

UMBRELLA PLAN

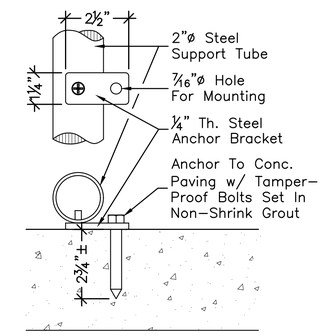

MOUNTING HARDWARE
Scale: 4"=1'-0"

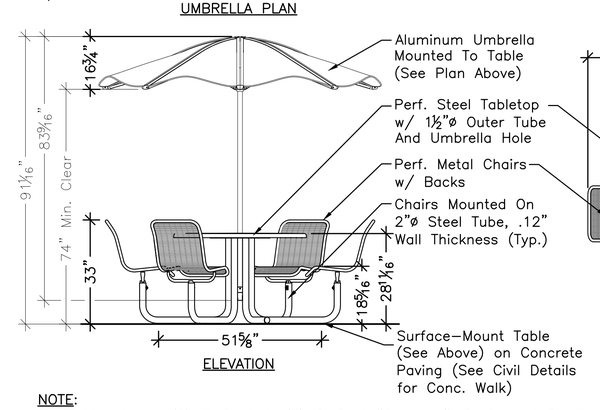

ELEVATION

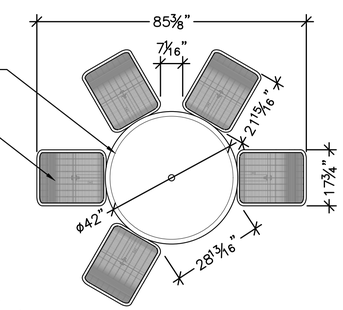

TABLE & CHAIRS PLAN
5-Seat Option Shown

NOTE:
1. Tables to be (2) 5-Seat & (3) 6-Seat "Carousel", Perforated Steelhead Tabletop and Perforated Metal Seats With Backs, with attached "Solstice" Umbrella, "Cygnus" Style, by Landscape Forms of Kalamazoo, MI or Approved Equal. Shop Drawings Required.
2. Powdercoat Finish Colors to be selected by Landscape Architect from full range of manufacture's color options.

6 Table With Metal Umbrella
Scale: ½"=1'-0" or As Noted

ISSUE FOR CONSTRUCTION

CBA | Landscape Architects LLC
24 THORNDIKE ST | CAMBRIDGE, MA 02141
phone 617.443.9160 | www.cbalandscapes.com

40 Shattuck Road, Suite 110
Andover, Massachusetts 01810
866.702.6371|www.woodardcurran.com
COMMITMENT & INTEGRITY DRIVE RESULTS
WOODARD & CURRAN
THIS DOCUMENT OR THE PROPERTY OF WOODARD & CURRAN INC. AND ITS CLIENT. THIS DOCUMENT OR THE PROPERTY HEREIN, MAY NOT BE REPRODUCED, OR TRANSMITTED, IN WHOLE OR IN PART, WITHOUT THE WRITTEN PERMISSION OF WOODARD & CURRAN INC.

MASSACHUSETTS DENIS J. CHERON NO. 1512 REGISTERED LANDSCAPE ARCHITECT

REV	DESCRIPTION	DATE
0	CONFORMED SET	12/13/2019

DESIGNED BY: CCB/PAH
DRAWN BY: PAH
CHECKED BY: CCB
1723_L5_DT.DWG

LANDSCAPE DETAILS

TOWN OF WINTHROP
1 METCALF SQUARE
WINTHROP, MASSACHUSETTS

CENTRE BUSINESS DISTRICT
INFRASTRUCTURE
IMPROVEMENTS

JOB NO.:230079
DATE: DECEMBER 2019
SCALE: VARIES
SHEET: 43 OF 59

L5.0

M:\0-CBA-Cad\Parks\Winthrop Center Business District\CD\1723_L5_DT.dwg, Jul 31, 2019 - 2:37pm

Existing Park Sign

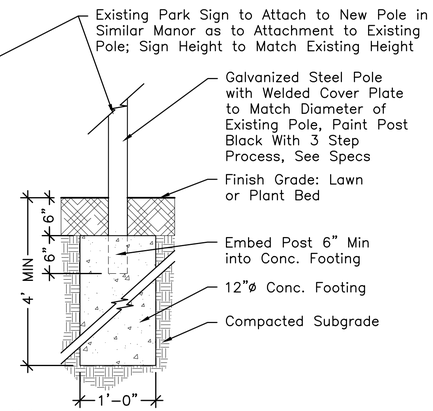

Notes:
1. SHOP DRAWINGS REQUIRED.
2. See specs for pole finish.
3. All Hardware to be Galvanized, Painted Black and Tamper Proof.

1 Park Sign

Scale: 1" = 1'-0"

EXISTING INTERPRETATIVE SIGN

ENLARGEMENT OF EXISTING SIGN'S BASE

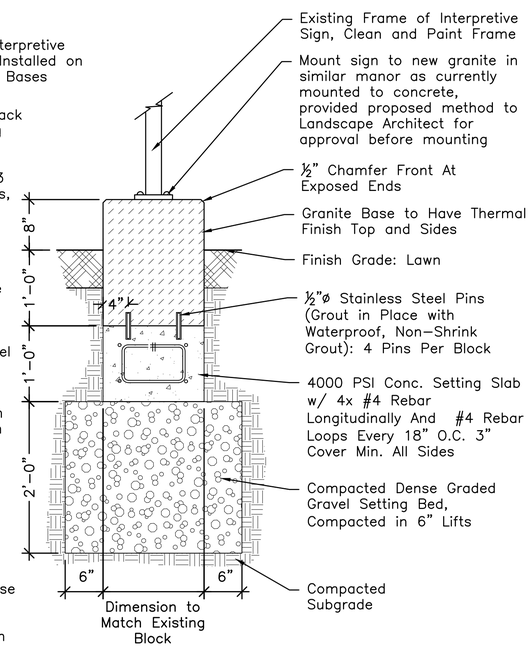

SECTION

Notes:
1. Contractor to Match Dimensions of Existing Sign and Sign Base
2. SHOP DRAWINGS REQUIRED.
3. All Hardware to be Galvanized, Painted Black and Tamper Proof
4. Painting to be Three Step Process, See Specifications
5. Existing Panel to be replaced with (2) ¼" Fiberglass Embedment Panels, each with graphic on one side. Panel graphics to be provided to contractor by Landscape Architect. Panels to be affixed back to back and placed within refurbished existing metal edging around current panel. Panel to be by Pannier Graphics, 345 Oak Road, Gibsonia, PA 15044, (724) 265-4900, or Approved Equal Contractor to provide dimensions of existing sign at time of ordering, see spec.
6. Granite type to be Concord Grey or Approved Equal

2 Interpretative Sign

Scale: 1" = 1'-0"

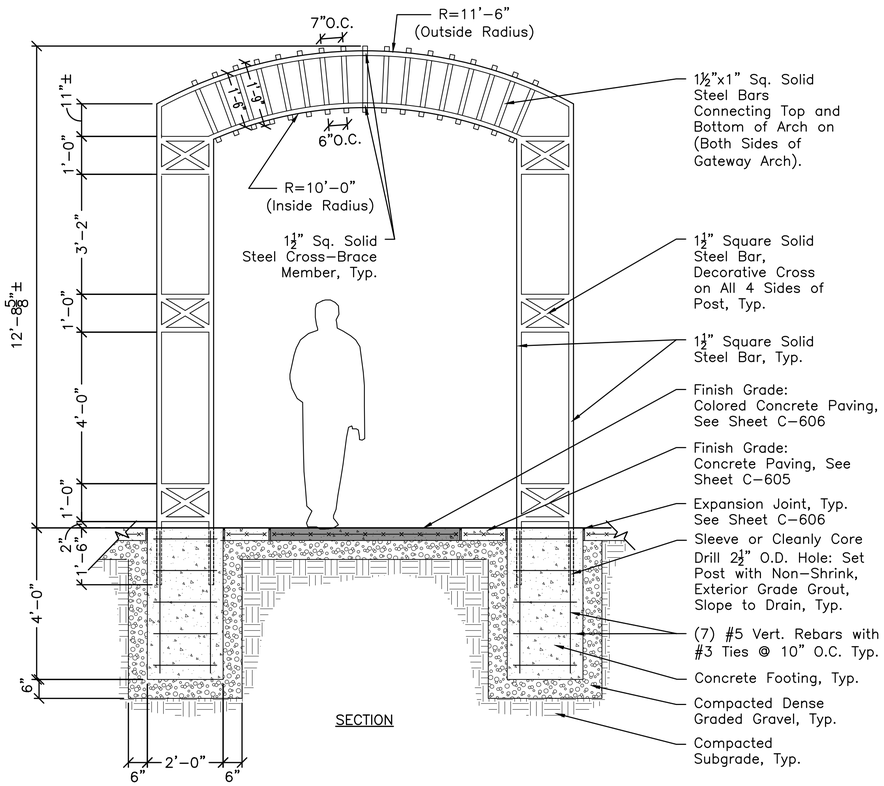

SECTION

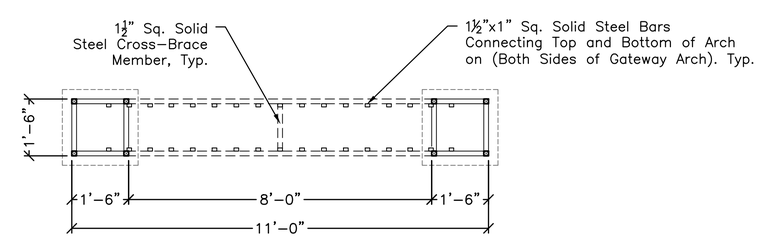

PLAN

NOTES:
1. SHOP DRAWINGS REQUIRED (INCLUDING ELEVATIONS WITH SPOT GRADES & WIDTH OF ALLEY). Footing to be adjusted as required to meet structural needs. Woodard & Currans Structural Engineer to Approve Shop Drawings.
2. Weld and grind smooth all edges and joints. All edges to be hand smoothed. All welds to be continuous; no spot or tack weld.
3. Entry Arch to be painted black with 3 step process, see specifications.

3 Steel Entry Arch

Scale: 1/2" = 1'-0"

ISSUE FOR CONSTRUCTION

CBA | Landscape Architects LLC
24 THORNDIKE ST | CAMBRIDGE, MA 02141
phone 617.443.9160 | www.cbalandscapes.com

WOODARD & CURRAN
COMMITMENT & INTEGRITY DRIVE RESULTS
40 Shattuck Road, Suite 110
Andover, Massachusetts 01810
866.702.6371|www.woodardcurran.com

THIS DOCUMENT IS THE PROPERTY OF WOODARD & CURRAN INC. AND ITS CLIENT. THIS DOCUMENT OR THE INFORMATION CONTAINED HEREIN MAY NOT BE REPRODUCED, REPURPOSED, OR TRANSFERRED.

MASSACHUSETTS REGISTERED LANDSCAPE ARCHITECT NO. 1512 DENIS J. CRAGIN

REV	DESCRIPTION	DATE
0	CONFORMED SET	12/13/2019

DESIGNED BY: CCB/PAH
DRAWN BY: PAH
CHECKED BY: CCB
1723_L5_DT.DWG

LANDSCAPE DETAILS

TOWN OF WINTHROP
1 METCALF SQUARE
WINTHROP, MASSACHUSETTS

CENTRE BUSINESS DISTRICT
INFRASTRUCTURE
IMPROVEMENTS

JOB NO.:230079
DATE: DECEMBER 2019
SCALE: VARIES
SHEET: 44 OF 59

L5.1

M:\0-CBA-Cad\Parks\Winthrop Center Business District\CD\1723_L5_DT.dwg, Jul 31, 2019 - 2:37pm

22x34 SHEET
1:31.073